PC37.238™/D5.5
Draft Standard for Use of IEEE Std. 1588 Precision Time Protocol in Power System Applications

Sponsor

Power System Relaying Committee and Substations Committee
of the
IEEE Power and Energy Society

Approved <XX MONTH 20XX>

IEEE-SA Standards Board

Abstract: This standard specifies a common profile for use of IEEE 1588-2008 Precision Time Protocol (PTP) in power system protection, control, automation and data communication applications utilizing an Ethernet communications architecture.
Keywords: IEEE 1588, precise time synchronization, precision time protocol, grandmaster clock, transparent clock, slave-only clock, sample synchronization, synchrophasors, power substation.

The Institute of Electrical and Electronics Engineers, Inc.
3 Park Avenue, New York, NY 10016-5997, USA

PDF: ISBN 978-0-XXXX-XXXX-X STDXXXXX
Print: ISBN 978-0-XXXX-XXXX-X STDPDXXXXX

IEEE Standards documents are developed within the IEEE Societies and the Standards Coordinating Committees of the IEEE Standards Association (IEEE-SA) Standards Board. The IEEE develops its standards through a consensus development process, approved by the American National Standards Institute, which brings together volunteers representing varied viewpoints and interests to achieve the final product. Volunteers are not necessarily members of the Institute and serve without compensation. While the IEEE administers the process and establishes rules to promote fairness in the consensus development process, the IEEE does not independently evaluate, test, or verify the accuracy of any of the information or the soundness of any judgments contained in its standards.

Use of an IEEE Standard is wholly voluntary. The IEEE disclaims liability for any personal injury, property or other damage, of any nature whatsoever, whether special, indirect, consequential, or compensatory, directly or indirectly resulting from the publication, use of, or reliance upon this, or any other IEEE Standard document.

The IEEE does not warrant or represent the accuracy or content of the material contained herein, and expressly disclaims any express or implied warranty, including any implied warranty of merchantability or fitness for a specific purpose, or that the use of the material contained herein is free from patent infringement. IEEE Standards documents are supplied "**AS IS**."

The existence of an IEEE Standard does not imply that there are no other ways to produce, test, measure, purchase, market, or provide other goods and services related to the scope of the IEEE Standard. Furthermore, the viewpoint expressed at the time a standard is approved and issued is subject to change brought about through developments in the state of the art and comments received from users of the standard. Every IEEE Standard is subjected to review at least every five years for revision or reaffirmation, or every ten years for stabilization. When a document is more than five years old and has not been reaffirmed, or more than ten years old and has not been stabilized, it is reasonable to conclude that its contents, although still of some value, do not wholly reflect the present state of the art. Users are cautioned to check to determine that they have the latest edition of any IEEE Standard.

In publishing and making this document available, the IEEE is not suggesting or rendering professional or other services for, or on behalf of, any person or entity. Nor is the IEEE undertaking to perform any duty owed by any other person or entity to another. Any person utilizing this, and any other IEEE Standards document, should rely upon his or her independent judgment in the exercise of reasonable care in any given circumstances or, as appropriate, seek the advice of a competent professional in determining the appropriateness of a given IEEE standard.

Interpretations: Occasionally questions may arise regarding the meaning of portions of standards as they relate to specific applications. When the need for interpretations is brought to the attention of IEEE, the Institute will initiate action to prepare appropriate responses. Since IEEE Standards represent a consensus of concerned interests, it is important to ensure that any interpretation has also received the concurrence of a balance of interests. For this reason, IEEE and the members of its societies and Standards Coordinating Committees are not able to provide an instant response to interpretation requests except in those cases where the matter has previously received formal consideration. A statement, written or oral, that is not processed in accordance with the IEEE-SA Standards Board Operations Manual shall not be considered the official position of IEEE or any of its committees and shall not be considered to be, nor be relied upon as, a formal interpretation of the IEEE. At lectures, symposia, seminars, or educational courses, an individual presenting information on IEEE standards shall make it clear that his or her views should be considered the personal views of that individual rather than the formal position, explanation, or interpretation of the IEEE.

Comments for revision of IEEE Standards are welcome from any interested party, regardless of membership affiliation with IEEE. Suggestions for changes in documents should be in the form of a proposed change of text, together with appropriate supporting comments. Recommendations to change the status of a stabilized standard should include a rationale as to why a revision or withdrawal is required. Comments and recommendations on standards, and requests for interpretations should be addressed to:

Secretary, IEEE-SA Standards Board
445 Hoes Lane
Piscataway, NJ 08854
USA

Introduction

This introduction is not part of IEEE PC37.238/D5.3, Draft Standard Profile for Use of IEEE Std 1588 Precision Time Protocol in Power System Applications.

This standard specifies a common profile for use of IEEE 1588-2008 Precision Time Protocol (PTP) in power system protection, control, automation and data communication applications utilizing an Ethernet communications architecture.

The profile can be used for precise time synchronization of the devices in a substation, and between substations in a larger geographical area, if performance requirements of this standard are met.

The use of different physical layer communication technologies to carry Ethernet frames, including SONET/SDH and wireless technologies, are not precluded if they can meet performance requirements of this standard.

Notice to users

Laws and regulations

Users of these documents should consult all applicable laws and regulations. Compliance with the provisions of this standard does not imply compliance to any applicable regulatory requirements. Implementers of the standard are responsible for observing or referring to the applicable regulatory requirements. IEEE does not, by the publication of its standards, intend to urge action that is not in compliance with applicable laws, and these documents may not be construed as doing so.

Copyrights

This document is copyrighted by the IEEE. It is made available for a wide variety of both public and private uses. These include both use, by reference, in laws and regulations, and use in private self-regulation, standardization, and the promotion of engineering practices and methods. By making this document available for use and adoption by public authorities and private users, the IEEE does not waive any rights in copyright to this document.

Updating of IEEE documents

Users of IEEE standards should be aware that these documents may be superseded at any time by the issuance of new editions or may be amended from time to time through the issuance of amendments, corrigenda, or errata. An official IEEE document at any point in time consists of the current edition of the document together with any amendments, corrigenda, or errata then in effect. In order to determine whether a given document is the current edition and whether it has been amended through the issuance of amendments, corrigenda, or errata, visit the IEEE Standards Association web site at http://ieeexplore.ieee.org/xpl/standards.jsp, or contact the IEEE at the address listed previously.

For more information about the IEEE Standards Association or the IEEE standards development process, visit the IEEE-SA web site at http://standards.ieee.org.

Errata

Errata, if any, for this and all other standards can be accessed at the following URL: http://standards.ieee.org/reading/ieee/updates/errata/index.html. Users are encouraged to check this URL for errata periodically.

Interpretations

Current interpretations can be accessed at the following URL: http://standards.ieee.org/reading/ieee/interp/index.html.

Patents

[If the IEEE has not received letters of assurance prior to the time of publication, the following notice shall appear:]

Attention is called to the possibility that implementation of this<opt_trial-use><gde./rec. prac./std.> may require use of subject matter covered by patent rights. By publication of this<opt_trial-use><gde./rec. prac./std.>, no position is taken with respect to the existence or validity of any patent rights in connection therewith. The IEEE is not responsible for identifying Essential Patent Claims for which a license may be required, for conducting inquiries into the legal validity or scope of Patents Claims or determining whether any licensing terms or conditions provided in connection with submission of a Letter of Assurance, if any, or in any licensing agreements are reasonable or non-discriminatory. Users of this<opt_trial-use><gde./rec. prac./std.> are expressly advised that determination of the validity of any patent rights, and the risk of infringement of such rights, is entirely their own responsibility. Further information may be obtained from the IEEE Standards Association.

[The following notice shall appear when the IEEE receives assurance from a known patent holder or patent applicant prior to the time of publication that a license will be made available to all applicants either without compensation or under reasonable rates, terms, and conditions that are demonstrably free of any unfair discrimination.]

Attention is called to the possibility that implementation of this<opt_trial-use><gde./rec. prac./std.> may require use of subject matter covered by patent rights. By publication of this<opt_trial-use><gde./rec. prac./std.>, no position is taken with respect to the existence or validity of any patent rights in connection therewith. A patent holder or patent applicant has filed a statement of assurance that it will grant licenses under these rights without compensation or under reasonable rates, with reasonable terms and conditions that are demonstrably free of any unfair discrimination to applicants desiring to obtain such licenses. Other Essential Patent Claims may exist for which a statement of assurance has not been received. The IEEE is not responsible for identifying Essential Patent Claims for which a license may be required, for conducting inquiries into the legal validity or scope of Patents Claims, or determining whether any licensing terms or conditions provided in connection with submission of a Letter of Assurance, if any, or in any licensing agreements are reasonable or non-discriminatory. Users of this<opt_trial-use><gde./rec. prac./std.> are expressly advised that determination of the validity of any patent rights, and the risk of infringement of such rights, is entirely their own responsibility. Further information may be obtained from the IEEE Standards Association.

Participants

At the time this draft<opt_trial-use><gde./rec. prac./std.> was submitted to the IEEE-SA Standards Board for approval, the <Working Group Name> Working Group had the following membership:

<Chair Name>, *Chair*
<Vice-chair Name>, *Vice Chair*

Participant1	Participant4	Participant7
Participant2	Participant5	Participant8
Participant3	Participant6	Participant9

The following members of the <individual/entity> balloting committee voted on this<opt_trial-use><gde./rec. prac./std.>. Balloters may have voted for approval, disapproval, or abstention.

(to be supplied by IEEE)

Balloter1	Balloter4	Balloter7
Balloter2	Balloter5	Balloter8
Balloter3	Balloter6	Balloter9

When the IEEE-SA Standards Board approved this<opt_trial-use><gde./rec. prac./std.> on <XX MONTH 20XX>, it had the following membership:

(to be supplied by IEEE)

<Name>, *Chair*
<Name>, *Vice Chair*
<Name>, *Past President*
<Name>, *Secretary*

SBMember1	SBMember4	SBMember7
SBMember2	SBMember5	SBMember8
SBMember3	SBMember6	SBMember9

*Member Emeritus

Also included are the following nonvoting IEEE-SA Standards Board liaisons:

<Name>, *NRC Representative*
<Name>, *DOE Representative*
<Name>, *NIST Representative*

<Name>
IEEE Standards Program Manager, Document Development

<Name>
IEEE Standards Program Manager, Technical Program Development

Contents

Draft Standard for Use of IEEE Std. 1588 Precision Time Protocol in Power System Applications

IMPORTANT NOTICE: This standard is not intended to ensure safety, security, health, or environmental protection. Implementers of the standard are responsible for determining appropriate safety, security, environmental, and health practices or regulatory requirements.

1. Overview

1.1 Scope

This standard specifies a common profile for use of IEEE 1588-2008 Precision Time Protocol (PTP) in power system protection, control, automation and data communication applications utilizing an Ethernet communications architecture.

The profile specifies a well-defined subset of IEEE 1588-2008 mechanisms and settings aimed at enabling device interoperability, robust response to network failures, and deterministic control of delivered time quality. It specifies the preferred physical layer (Ethernet), higher level protocol used for PTP message exchange and the PTP protocol configuration parameters. Special attention is given to ensuring consistent and reliable time distribution within substations, between substations, and across wide geographic areas.

1.2 Purpose

The purpose of this standard is to facilitate adoption of IEEE Std 1588-2008 for power system applications requiring high precision time synchronization. It specifies a common subset of PTP parameters and options to provide global time availability, device interoperability and failure management. This set of PTP parameters and options allows IEEE 1588-2008 based time synchronization to be used in mission critical power system protection, control, automation and data communication applications.

2. Normative references

The following referenced documents are indispensable for the application of this document (i.e., they must be understood and used, so each referenced document is cited in text and its relationship to this document is explained). For dated references, only the edition cited applies. For undated references, the latest edition of the referenced document (including any amendments or corrigenda) applies.

IEEE Std 1588™ – 2008, IEEE Standard for a Precision Clock Synchronization Protocol for Networked Measurement and Control Systems.

3. Definitions and special terms

For the purposes of this document, the following terms and definitions apply. The *IEEE Standards Dictionary: Glossary of Terms & Definitions* should be referenced for terms not defined in this clause.[1]

For the purposes of this document, the following terms and definitions and special terms apply.

3.1 Definitions

3.1.1 accuracy: The mean of the time or frequency error between the clock under test and a perfect reference clock, over an ensemble of measurements. Stability is a measure of how the mean varies with respect to variables such as time, temperature, and so on. The precision is a measure of the deviation of the error from the mean.

3.1.2 boundary clock: A clock that has multiple Precision Time Protocol (PTP) ports in a domain and maintains the timescale used in the domain. It may serve as the source of time, i.e., be a master clock, and may synchronize to another clock, i.e., be a slave clock.

3.1.3 clock: A device participating in the Precision Time Protocol (PTP) that is capable of providing a measurement of the passage of time since a defined epoch.

NOTE—In the case of PTP ordinary and boundary clocks that are properly synchronized, the epoch is the epoch of the timescale in use. In the case of PTP transparent clocks, the epoch is locally defined and not necessarily aligned with the timescale.

3.1.4 device: a node with one or more Ethernet ports that is compliant to IEEE C37.238 standard.

NOTE—Devices are network devices and ordinary clocks.

3.1.5 default: When applied to attribute values and options means the configuration of a Precision Time Protocol (PTP) device as it is delivered from the manufacturer.

3.1.6 domain: A logical grouping of clocks that synchronize to each other using the protocol, but that are not necessarily synchronized to clocks in another domain.

3.1.7 end device: an application specific device with slave-only clock functionality.

3.1.8 epoch: The origin of a timescale.

[1] *The IEEE Standards Dictionary: Glossary of Terms & Definitions* is available at http://shop.ieee.org/.

3.1.9 event: An abstraction of the mechanism by which signals or conditions are generated and represented.

3.1.10 HSR node: a device with HSR functionality compliant to IEC 62439-3 with hybrid clock.

3.1.11 hybrid clock: a device with transparent clock and ordinary clock.

3.1.12 grandmaster-capable clock: An ordinary clock that is currently capable of PTP Master state.

3.1.13 grandmaster clock: Within a domain, a clock that is the ultimate source of time for clock synchronization using the protocol.

3.1.14 holdover: A clock previously synchronized/syntonized to another clock (normally a primary reference or a master clock) but now free-running based on its own internal oscillator, whose frequency is being adjusted using data acquired while it had been synchronized/syntonized to the other clock. It is said to be in holdover or in the holdover mode, as long as it is within its accuracy requirements.

3.1.15 link: A network segment between two Precision Time Protocol (PTP) ports supporting the peer delay mechanism of this standard. The peer delay mechanism is designed to measure the propagation time over such a link.

3.1.16 multicast communication: A communication model in which each Precision Time Protocol (PTP) message sent from any PTP port is capable of being received and processed by all PTP ports on the same PTP communication path.

3.1.17 network device: a device used on PTP communication path to connect grandmaster clock to one or more ordinary clocks directly or through one or more network devices.

NOTE—Ethernet bridges and HSR nodes are network devices.

3.1.18 one-step clock: A clock that provides time information using a single event message.

3.1.19 ordinary clock: A clock that has a single Precision Time Protocol (PTP) port in a domain and maintains the timescale used in the domain. It may serve as a source of time, i.e., be a master clock, or may synchronize to another clock, i.e., be a slave clock.

NOTE—An ordinary clock can be grandmaster-capable or slave-only clock.

3.1.20 parent clock: The master clock to which a clock is synchronized.

3.1.21 peer-to-peer transparent clock: A transparent clock that, in addition to providing Precision Time Protocol (PTP) event transit time information, also provides corrections for the propagation delay of the link connected to the port receiving the PTP event message. In the presence of peer-to-peer transparent clocks, delay measurements between slave clocks and the master clock are performed using the peer-to-peer delay measurement mechanism.

3.1.22 portNumber: An index identifying a specific Precision Time Protocol (PTP) port on a PTP node.

3.1.23 precision: See: accuracy.

3.1.24 Precision Time Protocol (PTP): The protocol defined by IEEE Std. 1588-2008. As an adjective, it indicates that the modified noun is specified in or interpreted in the context of IEEE Std. 1588-2008.

3.1.25 primary reference: A source of time and or frequency that is traceable to international standards. See also: traceability.

3.1.26 profile: The set of allowed Precision Time Protocol (PTP) features applicable to a device.

3.1.27 Precision Time Protocol (PTP) communication: Information used in the operation of the protocol, transmitted in a PTP message over a PTP communication path.

3.1.28 Precision Time Protocol (PTP) communication path: The signaling path portion of a particular network enabling direct communication among ordinary and boundary clocks.

3.1.29 Precision Time Protocol (PTP) message: One of the message types defined in IEEE Std. 1588-2008.

3.1.30 Precision Time Protocol (PTP) port: A logical access point of a clock for PTP communications to the communications network.

3.1.31 recognized standard time source: A recognized standard time source is a source external to Precision Time Protocol (PTP) that provides time and/or frequency as appropriate that is traceable to the international standards laboratories maintaining clocks that form the basis for the International Atomic Time (TAI) and Universal Coordinated Time (UTC) timescales. Examples of these are Global Positioning System (GPS), NTP, and National Institute of Standards and Technology (NIST) timeservers.

3.1.32 residence time: The time difference between ingress and egress timestamps for a IEEE C37.238 Sync message.

3.1.33 slave-only clock: An ordinary clock that is not currently capable of PTP Master state.

3.1.34 stability: See: accuracy.

3.1.35 synchronized clocks: Two clocks are synchronized to a specified uncertainty if they have the same epoch and their measurements of the time of a single event at an arbitrary time differ by no more than that uncertainty.

3.1.36 syntonized clocks: Two clocks are syntonized if the duration of the second is the same on both, which means the time as measured by each advances at the same rate. They may or may not share the same epoch.

3.1.37 timeout: A mechanism for terminating requested activity that, at least from the requester's perspective, does not complete within the specified time.

3.1.38 timescale: A linear measure of time from an epoch.

3.1.39 traceability: A property of the result of a measurement or the value of a standard whereby it can be related to stated references, usually national or international standards, through an unbroken chain of comparisons all having stated uncertainties. (adapted from the International Vocabulary of Basic and General Terms in Metrology [B7])

3.1.40 transparent clock: A device that measures the time taken for a Precision Time Protocol (PTP) event message to transit the device and provides this information to clocks receiving this PTP event message. See also: end-to-end transparent clock; peer-to-peer transparent clock.

3.1.41 two-step clock: A clock that provides time information using the combination of an event message and a subsequent general message. See also: one-step clock.

3.2 Special terms

3.2.1 IEEE C37.238 message: a PTP message compliant to IEEE C37.238 standard.

4. Abbreviations

The following abbreviations are used in this standard:

API	Application Programming Interface
BMC	best master clock
BC	boundary clock
DANP	double attached node implementing PRP
DANH	double attached node implementing HSR
DNP	Distributed Network Protocol
IERS	International Earth Rotation and Reference Systems Service
GPS	Global Positioning System
HSR	High-availability Seamless Redundancy
ID	identification
IED	Intelligent Electronic Device
LN	Logical Node
MAC	media access control [according to IEEE Std. 802.3-2005]
MIB	Management Information Base
OUI	organizational unique identifier (allocated by the IEEE)

NOTE—The OUI is typically used in specifications or the implementation of devices for the purpose of identification. It identifies the organization that owns the OUI-dependent subidentifier and may not necessarily be the organization that defines the specification or provides the hardware. The IEEE OUI listing can be obtained at http://standards.ieee.org/regauth/oui/index.shtml.

P2P	peer-to-peer
RCT	Redundancy Control Trailer
PRP	Parallel Redundancy Protocol
PTP	Precision Time Protocol
SCADA	Supervisory Control and Data Acquisition

SNMP	Simple Network Management Protocol
SV	Sampled Value
TC	transparent clock
TLV	type, length, value [according to IEEE Std. 802.1AB]
UTC	Coordinated Universal Time

5. Standard Profile for Power System Applications

5.1 Identification

PTP Profile

IEEE Standard Profile for Use of IEEE 1588 Precision Time Protocol in Power System Applications

Version: 1.0

Profile identifier: 1C-12-9D-00-00-00

This profile is specified by the IEEE 1588 Profile for Power System Applications Working Group of the IEEE Power System Relaying Committee and IEEE Power System Substation Committee. A copy may be obtained by ordering IEEE Std C37.238-2011 from IEEE Standards Organization http://standards.ieee.org.

5.2 PTP attribute values

All nodes shall support the ranges and shall have the default initialization values for attributes as follows:

— portDS.logAnnounceInterval: the value shall be 0.

— portDS.logSyncInterval: the value shall be 0.

— portDS.announceReceiptTimeout: the value shall be 3.

— τ, see IEEE Std 1588-2008 7.6.3.2: the value shall be 1.0 seconds.

— portDS.logMinPdelayReqInterval: the default initialization value shall be 0. The configurable range shall be -3 to 5. Delay measurements should be done in bursts with pauses of several seconds.

— defaultDS.priority1: the default initialization value shall be 128 for grandmaster-capable devices and 255 for slave-only devices.

— defaultDS.priority2: the default initialization value shall be 128 for grandmaster-capable devices and 255 for slave-only devices.

— defaultDS.slaveOnly: the default initialization value shall be FALSE for grandmaster-capable devices and TRUE for slave-only devices.

— defaultDS.domainNumber: the default initialization value shall be 0. Only one domain is supported by a device at a time. The configurable range shall be as specified by IEEE Std 1588-2008 7.1 and Table 2.

— transparentClockdefaultDS.primaryDomain: the value shall be 0. Configurable range shall be as specified by IEEE Std 1588-2008 7.1 and Table 2.

5.3 Path Delay Mechanism

The Peer delay request mechanism of IEEE Std 1588-2008 shall be the only path delay measurement mechanism in operation when this profile is deployed.

Path delay measurement and correction for the link to a slave-only IED is optional, if it is not functioning as a TC. Such IEDs shall use Timestamp and CorrectionField value to adjust its clock.

5.4 Best Master Clock Algorithm

5.4.1 Default best master clock algorithm

The master-slave hierarchy shall be determined using the default best master clock algorithm, specified in IEEE Std 1588-2008 9.3.2, 9.3.3, and 9.3.4.

All devices except slave-only clocks shall support the full functionality of the default best master clock algorithm.

5.4.2 Default settings

Default device settings shall be determined by the most likely device function.

Unless a device's primary function is a grandmaster clock, its default configuration shall be slave-only clock.

Slave-only clocks:

• shall not transmit IEEE C37.238 Announce messages, in order to avoid advertising themselves as potential grandmasters

• shall have priority1 and ClockClass values set to 255, IEEE Std 1588-2008 7.6.2.2 and 7.6.2.4.

5.5 Management Mechanism

All grandmaster-capable devices shall report local time accuracy and traceability to a standard recognized time source.

Grandmaster-capable devices shall support SNMP MIB.

SNMP support for all other devices is optional. When supported IEEE C37.238 MIB shall be used.

All devices that do not support IEEE C37.238 MIB except transparent clocks shall specify whether and how the following information is made available

- local time accuracy

- traceability to a standard recognized time source

- offset from the grandmaster

- if the offset from a grandmaster exceeds a configurable limit.

NOTE - Refer to Annex C.3, C4 for reporting mechanisms for IEC 61850 and IEEE C37.118 applications.

5.5.1 Management Information Base Objects

IEEE C37.238 MIB Objects are listed in the Table 1.

Table 1— IEEE C37.238 MIB Objects

IEEE C37.238 MIB Objects		Description	
N	**Name**	**IEEE Std 1588 -2008 clause unless otherwise specified**	**R/W**
Boundary and Ordinary Clocks Objects			
1	**ieeeC37238defaultDS**	8.2.1	
2	TwoStepFlag	8.2.1.2.1	**R/W**
3	ClkIdentity	8.2.1.2.2	R
4	NumberPorts	8.2.1.2.3	R
5	ClkClass	8.2.1.3.1.1	R
6	ClkAccuracy	8.2.1.3.1.2	R
7	OfsScdLogVar	8.2.1.3.1.3	R
8	Priority1	8.2.1.4.1	R/W
9	Priority2	8.2.1.4.2	R/W
10	DomainNumber	8.2.1.4.3	R/W
11	SlaveOnly	8.2.1.4.4	R/W
12	GMIdentity	GM identity to be transmitted in GRANDMASTER_ID TLV	R/W
13	OfstFrMLimit	Offset from Master Limit to generate OfstExceedsLimit event	R/W
14	**ieeeC37238currentDS**	8.2.2	
15	StepsRemoved	8.2.2.2	R
16	OfstFrMaster	8.2.2.3	R
17	**ieeeC37238parentDS**	8.2.3	
18	ClkIdentity	8.2.3.2	R
19	PortNumber	8.2.3.2	R
20	Stats	8.2.3.3	R
21	ObsOfstScdLVar	8.2.3.4	R
22	ObsPhChgRate	8.2.3.5	R
23	GMClkIdentity	8.2.3.6	R
24	GMClkClass	8.2.3.7	R
25	GMClkAccuracy	8.2.3.7	R
26	GMOfstScdLVar	8.2.3.7	R
27	GMPriority1	8.2.3.8	R
28	GMPriority2	8.2.3.9	R
29	GMIdentity	GM identity received in GRANDMASTER_ID TLV	R

30	**ieeeC37238timePropDS**	8.2.4	
31	CurUTCOfst	8.2.4.2	R
32	CurUTCOfstVd	8.2.4.3	R
33	Leap59	8.2.4.4	R
34	Leap61	8.2.4.5	R
35	TmeTraceable	8.2.4.6	R
36	FrqTraceable	8.2.4.7	R
37	PTPTimescale	8.2.4.8	R
38	TimeSource	8.2.4.9	R
39	LocalTCurOfs	16.3.3.4	R/W
40	LocalTJumpS	16.3.3.5	R/W
41	LocalTNtJump	16.3.3.6	R/W
42	LocalTName	16.3.3.7	R/W
43	LeapEvLatest	The seconds portion of PTP time for the second prior to the latest IERS-announced leap-second event (may be past or future)	R/W
44	UTCOfstNext	Seconds offset between TAI and UTC timescales after LeapEvLatest. (same as CurUTCOfst after LeapEvLatest time)	R/W
45	LeapEvExpiry	The seconds portion of PTP time for the expiry of the latest IERS-announced leap-second event. If PTP time > LeapEvExpiry, devices shall set CurUTCOfstVd to False.	R/W
46	**ieeeC37238portDS**	8.2.5	
47	ClkIdentity	8.2.5.2.1	R
48	PortNumber	8.2.5.2.1	R
49	PortState	8.2.5.3.1	R
50	MPathDly	8.2.5.3.3	R
51	LogAnnounceInt	8.2.5.4.1	R/W
52	AnnounceRctTout	8.2.5.4.2	R/W
53	LogSyncInt	8.2.5.4.3	R/W
54	DelayMech	8.2.5.4.4	R/W
55	LogMinPdlyRInt	8.2.5.4.5	R/W
56	VersionNumber	8.2.5.4.6	R
57	PortEnabled	True if port is enabled.	R/W
58	DlyAsymmetry	Path delay asymmetry.	R/W
59	ProfileId	Indicates the PTP Profile in use.	R/W
60	NetProtocol	Indicates Network Protocol in use.	R/W
61	VlanId	Port VLAN ID	R/W
62	Priority	Port Priority	R/W
Transparent Clock Objects			
63	**ieeeC37238TCDefaultDS**	8.3.2	
64	ClkIdentity	8.3.2.2.1	R
65	NumberPorts	8.3.2.2.2	R
66	DelayMech	8.3.2.3.1	R/W
67	PriDomain	8.3.2.3.2	R/W
68	Syntonize	True if syntonization is enabled.	R/W
69	CurGMaster	Comprises current grandmaster identity.	R
70	TwoStepFlag	8.2.1.2.1	R/W
71	GMIdentity	GM identity received in GRANDMASTER_ID TLV	R
72	NetProtocol	Indicates Network Protocol in use.	R/W
73	VlanId	Port VLAN ID	R/W
74	Priority	Port Priority	R/W
75	**ieeeC37238TCPortDS**	8.3.3	
76	PortNumber	8.3.3.2.1	R

77	LMinPdlyRInt	8.3.3.3.1	R/W
78	Faulty	8.3.3.3.2	R
79	MeanPDly	8.3.3.3.3	R
80	DlyAsymm	Path delay asymmetry.	R/W
Boundary and Ordinary Clock Objects (Optional for Transparent Clocks)			
81	**ieeeC37238Events**		
82	ChangeOfMaster	Indicates that new grandmaster has been selected.	
83	MasterStepChange	Indicates that a step change occurred in current grandmaster time.	
84	FaultyState	Indicates that a clock has entered faulty state.	
85	PortStateChange	Indicates that port state has changed.	
86	OfstExceedsLimit	Indicates that for a clock in a slave state Offset from Master exceeds configurable limit.	
87	OtherProfileDetect	Indicates that other PTP profile has been detected	
88	LeapSecAnnounced	Indicates that a leap second has been announced.	
89	PTPServiceStarted	Indicates that PTP service has started.	
90	PTPServiceStopped	Indicates that PTP service has stopped.	

5.6 Transport Mechanism

The PTP over IEEE 802.3 transport mapping, specified in IEEE Std 1588-2008 Annex F, shall be the default transport mechanism in all IEEE 1588 IEDs devices used in a substation system.

All IEEE C37.238 messages shall be mapped into IEEE 802.1Q-tagged Ethernet frames with configurable priority and configurable VLAN ID. Default priority shall be 4. Default VID shall be 0. Full range of priority and VID values shall be supported per [B5].

5.7 Clock Types

5.7.1 One-step and two-step clocks

All devices' ingress ports shall support both one-step and two-step modes.

All devices' egress ports may support either one-step or two-step modes.

It is recommended that one-step operation would be the only mode of operation supported as it results in a less network traffic, faster possible IEEE C37.238 Sync messages rates, and potentially simpler IED implementations. However, allowing for either one-step or two-step operation in a transparent clock allows for potentially simpler silicon solutions for Ethernet switches and the use of commercially available chipsets.

5.7.2 Slave-only clocks

IEDs may be designed as slave-only clocks, as specified in IEEE 1588-2008 9.2.2.

NOTE—It is recommended that slave-only clocks use the IEEE C37.238 message bytes as described in Annex D. (IEEE C37.238 compliant devices provide all these bytes).

5.8 Communication Model

The multicast communication model specified in IEEE Std 1588-2008 7.3 shall be used. The multicast MAC addresses shall conform to IEEE Std 1588-2008 Annex F: 01 – 80 – C2 – 00 – 00 – 0E for IEEE C37.238 Pdelay messages and 01 – 1B – 19 – 00 – 00 – 00 for all other IEEE C37.238 messages.

5.9 Timescale

5.9.1 PTP timescale

The timescale of a substation system shall be the PTP timescale, IEEE Std 1588-2008 7.2.

5.9.2 Grandmaster clockClass

Any clock specifically designed to be the grandmaster clock shall be designed to operate as a clockClass 6 clock, IEEE Std 1588-2008 7.6.2.4.

5.9.3 Grandmaster clockClass degradation

Any clock specifically designed to be the grandmaster clock shall be designed to degrade to a clockClass 7 or 187 clock when appropriate, IEEE Std 1588-2008 7.6.2.4.

5.9.4 Grandmaster clockAccuracy degradation

Any clock specifically designed to be the grandmaster clock shall be designed to degrade its clockAccuracy when appropriate (e.g. when in holdover), IEEE Std 1588-2008 7.6.2.5.

5.9.5 Grandmaster timescale

All ordinary and boundary clocks in a substation system shall be designed to support the PTP timescale in the event they become the grandmaster.

5.9.6 Grandmaster ID

Grandmaster clocks shall have a configurable 1-byte ID. Grandmaster ID shall be communicated using profile specific GRANDMASTER_ID TLV, defined in 5.12.2.

5.10 Clause 16 and 17 Annex K and L Options

From the options specified in IEEE Std 1588-2008 16, 17, Annex K and Annex L only ALTERNATE_TIME_OFFSET_INDICATOR TLV is required

5.11 clockIdentity

clockIdentity values, IEEE Std 1588-2008 7.5.2.2, shall be EUI-64 constructed based on EUI-48.

5.12 TLVs

5.12.1 IEEE Std 1588-2008 TLVs

The following TLV defined in IEEE Std 1588-2008 14 shall be supported by all devices:

• ALTERNATE_TIME_OFFSET_INDICATOR TLV (IEEE Std 1588-2008 16.3) for determining Local time

• ORGANIZATION_EXTENSION (IEEE Std 1588-2008 14.3), as defined in 5.12.2.

These TLVs shall be appended to IEEE C37.238 Announce messages.

The order of the mandatory TLVs shall be as follows:

- ALTERNATE_TIME_OFFSET_INDICATOR TLV
- ORGANIZATION_EXTENSION (GRANDMASTER_ID TLV)

Additional (non-IEEE C37.238) TLVs if supported shall follow the mandatory TLVs.

5.12.2 Profile specific TLVs

The following profile specific TLV shall be supported:

• GRANDMASTER_ID TLV

This TLV shall be used to communicate the current Grandmaster ID. The dataField is user configurable.

The implementation of this TLV shall conform to the terms of IEEE Std 1588-2008 14.3.

The GRANDMASTER_ID TLV field values shall be as follows:

• tlvType (Enumeration16); ORGANIZATION_EXTENSION value = 0003 hex

• lengthField (UInteger16) value = 0008 hex. The number of octets in the dataField

• organizationId (Octet[3]); The OUI value assigned by IEEE RAC = 1C129D hex

• organizationSubType (Enumeration24) value = 000001hex

• dataField (2 octets) value 0003-00FE hex, most significant byte is reserved and shall be 0.

The GRANDMASTER_ID TLV shall not be sent until the grandmaster clock has been assigned a unique GRANDMASTER_ID.

Annex A

(informative)

Operating modes

A.1 Overview

This profile for use of IEEE 1588 precision time protocol (PTP) in power system applications describes a robust, Ethernet based method for precise clock synchronization. Although optimized for stringent timing applications, it is versatile enough to allow simple implementations while retaining good balance between time precision and the complexity of implementation.

Substation applications can be broadly divided into following categories:

1. General purpose, visually observed time indicators (< +/-100 ms)

2. Time stamping of SCADA data and operational data logs (< +/-1 ms)

3. IRIG-B replacement applications with limited distance to the PTP grandmaster (< +/-1 µs)

4. Extended distance applications (full PTP support, < +/-1 µs)

First three categories operate as simple slaves and are not allowed to participate in the BMC election process. They are located at the network edge (last device), and cannot pass traffic to others, meaning they are not required to support transparent clock functionality. Devices in the first three categories are expected to process IEEE C37.238 Sync, Follow_Up and Announce messages, but do not need to support Pdelay exchange or transmit IEEE C37.238 Pdelay messages. They process all IEEE C37.238 Sync message fields (including correctionField), support one-step and two-step operation (with and without Follow_Up), and correctly process the leap second events, as specified in Annex D.

A.2 Description

Category 1 devices typically target general purpose processors, and do not require PTP specific hardware. Although some evaluation of the software stack delays may be required, this category does not generally need specialized software techniques. Software stack needs to be capable of receiving and analyzing layer 2 messages.

Category 2 devices may target general purpose processors and do not necessarily require PTP specific hardware. Due to additional precision requirements, this implementation may need to use interrupts, or careful / customized software implementation. While it may be possible to use general purpose software stack, some optimization is likely to be required.

Category 3 devices are intended for direct replacement of IRIG-B (pulse per second) distribution networks in which the distance between the last PTP source (PTP grandmaster, boundary clock or transparent clock) and the category 3 slave does not exceeding 100m (propagation delay < 0.5 µs). It is intended to replicate current applications which do not explicitly compensate IRIG cable length. Category 3 devices may target general purpose microprocessors, but require PTP specific hardware support (hardware based timestamping). With exception of not measuring the length of the last cable / fiber segment (not supporting IEEE C37.238 Pdelay message exchange), in all other aspects, Category 3 devices are expected to emulate the Category 4 slave behavior.

Category 4 devices support full implementation of this profile. They require hardware assisted timestamping, and participate in the IEEE C37.238 Pdelay message exchange. Category 4 devices may be placed anywhere in the network.

Annex B

(normative)

Time performance requirements

This Annex specifies performance requirements for the devices and networks providing time distribution service to the end devices. These devices include grandmaster clocks, transparent clocks and ordinary clocks that are part of the PTP communication path. Performance requirements for the end devices are application dependent and are out of scope of this Annex.

Network devices shall be able to distribute time from a grandmaster clock to the end devices over 16 network hops. Time accuracy available at the end devices shall be +/- 1 µs with 10^{-4} out-of-spec probability [B1]. This shall apply for network loads up to 80% wire-speed. Random-length Ethernet frames shall be used: 80% with priority 4 and 20% with lower priority.

Maximum time error introduced by grandmaster clocks compliant to IEEE C37.238 shall be 0.2 µs.

NOTE—Grandmaster clocks with time accuracy that exceeds 0.2 µs may be used for shorter PTP communication paths (less than 16 network hops), if the max time error accumulated in the communication path is less than 1 µs.

Maximum time error introduced by transparent clocks compliant to IEEE C37.238 shall be 50 ns.

Holdover drift of grandmaster-capable devices shall be within 2 µs for up to 5 seconds at a constant temperature.

The time it takes a device to report its status and start IEEE C37.238 associated stack and processes on start-up shall be specified by the manufacturer.

Annex C

(informative)

Time performance parameters and their use for IEC 61850 and IEEE C37.118 applications

This Annex describes

- IEEE C37.238 time performance parameters
- Time performance parameters mapping into IEEE C37.238 management MIB
- Use of time performance parameters for IEC 61850 and IEEE C37.118 applications
- IEC 61850 Logical Node for switch function and IEEE C37.238

C.1 Time performance parameters

Power substation applications require accurate time synchronization and time quality information for phasor estimations relative to UTC time, sample synchronization, event time stamping, and other functions.

Time quality information generally includes

- local clock accuracy, and
- traceability to a recognized standard time source.

Grandmaster time accuracy is transmitted in the clockAccuracy parameter of the grandmasterClockQuality field of the IEEE C37.238 Announce message, IEEE Std 1588-2008 13.5 and Table 25. Local clock uses received grandmaster accuracy and internal knowledge of its own accuracy to determine local clockAccuracy.

Supported values and encoding for clockAccuracy parameter as provided in Tables C1 and C3.

Grandmaster clocks normally interact with a primary reference, such as GPS, by a means that is outside this standard. Traceability to a recognized standard time source, such as GPS, is indicated by grandmaster clocks in the timeTraceable bit of the flagField located in the IEEE C37.238 Announce message. This flag lets other clocks know whether the grandmaster is traceable to a recognized time source.

In addition, grandmaster ID parameter is provided in IEEE C37.238 GRANDMASTER_ID TLV for grandmaster identification, particularly useful during transitions to a new grandmaster.

Currently selected grandmaster clockAccuracy and local clockAccuracy, as well as timeTraceable flag are provided in the IEEE C37.238 management MIB for status reporting, see Table 1 and Annex F.

IEEE C37.238 time performance parameters also have to be mapped into application specific parameters. Their use for IEC 61850 and IEEE C37.118 applications is described in C.3 and C.4.

More detailed information regarding clock performance can be obtained from PTP datasets. Boundary, ordinary, and transparent clocks are required to support specific datasets, IEEE Std 1588-2008 subcause 8. If these clocks also support another protocol, such as DNP3 or Modbus, they may also support the mapping of the data available from the either the clock data sets or transparent clock data sets to provide that data via that supported protocol. Mapping of these values is outside the scope of this standard. Another option outside the scope of this standard is to use a data concentrator that supports SNMP and use the data concentrator to map the IEEE C37.238 management MIB data to another protocol, provided that the management MIB supports all of the required datasets.

Slave clocks may need to track the performance of their parent in order to determine whether the parent's signal is a valid signal, IEEE Std 1588-2008 A.4. Remote substations utilizing PTP may be subject to grandmaster clock failure when time or frequency can become incorrect, plus deliberate effects such as GPS spoofing that substitutes the real GPS signals with other signals. Mechanisms to provide this performance monitoring may be considered in a future revision of the IEEE C37.238 standard.

C.2 Use of IEEE C37.238 MIB for time performance parameters

Local clock time accuracy and traceability to a standard recognized time source are available in the IEEE C37.238 MIB as specified in Table 1 and Annex F.

Grandmaster clockAccuracy is available as ieeeC37238ParentDSGrandmasterClockAccuracy, object 8 of the Parent dataset ieeeC37238ParentDS.

Local clockAccuracy is available as ieeeC37238DefaultDSClockAccuracy, object 5 in the Default dataset ieeeC37238DefaultDS.

timeTraceable flag is available as ieeeC37238DefaultDSTimeTraceable, object 5 in the Time Properties dataset ieeeC37238DefaultDS.

Currently selected grandmaster identity is communicated via GRANDMASTER_ID TLV and is available in the IEEE C37.238 management MIB object GMIdentity, object 11 in the Default dataset ieeeC37238DefaultDS and object 8 in the transparent clock default dataset ieeeC37238TCDefaultDS.

C.3 Use of IEEE C37.238 for IEC 61850 applications

IEC 61850 standard specifies TimeStamp type for time stamping all data provided by IEDs and SmpSynch parameter for time quality information for the sampled value service [B2, B3].

C.3.1 IED data time stamping

The IEC 61850 TimeStamp represents a UTC time with the epoch of midnight (00:00:00) of 1970-01-01 [B2].

IEC 61850 TimeAccuracy attribute defines the number of significant bits in the FractionOfSecond, n, of the IEC 61850 TimeStamp, based on clock time accuracy information.

IEEE C37.238 local clockAccuracy provides information for determining IEC 61850 TimeAccuracy value.

Mapping between the IEC 61850 TimeAccuracy and IEEE C37.238 local clockAccuracy is shown in Table C1.

Table C.1— Mapping between IEEE C37.238 local clockAccuracy and IEC 61850 TimeAccuracy

IEEE C37.238 local clockAccuracy		IEC 61850-7-2 TimeAccuracy		
Value, hex	**Description**	**n, hex**	**Time Accuracy (2**n)**	**Time performance class defined in IEC 61850-5**
00-1F 2C-FF	reserved unused, reserved for alternate PTP profiles	1F	-	unspecified
2A-2B	The time is accurate to within 2.5 -10 ms	7	approx. 7.8 ms	10 ms (performance class T0)
28-29	The time is accurate to within 250 μs -1 ms	A	approx. 0.9 ms	1 ms (performance class T1)
27	The time is accurate to within 100 μs	E	approx. 61 μs	100 μs (performance class T2
25-26	The time is accurate to within 10 - 25 μs	10	approx. 15 μs	25 μs (performance class T3)
24	The time is accurate to within 2.5 μs	12	approx. 3.8 μs	4 μs (performance class T4)
20-23	The time is accurate to within 25ns -1 μs	14	approx. 0.9 μs	1 μs (performance class T5)

C.3.2 Sampled Value service

IEC 61850 SmpSynch contains time quality information for the sampled value service [B3].

IEEE C37.238 timeTraceable flag corresponds to IEC 61850 reporting in SmpSynch that SV are synchronized by a global area clock.

IEEE C37.238 Grandmaster ID should be used in IEC 61850 SmpSynch to report what local area clock the SV are synchronized to.

C.3.3 IEC 61850 Logical Node for switch function and IEEE C37.238

Future edition of the IEC 61850 standard may include a part on Logical Node (LN) for switch function. The intention is to create a data model with a dedicated LN for the switch function which could include the IEEE C37.238. The impact of adding such IEC 61850 LN cannot be integrated yet, and may be considered in a future revision of the IEEE C37.238 standard.

C.4 Use of IEEE C37.238 for IEEE C37.118 applications

IEEE C37.118 Synchrophasor applications require information on time quality and traceability to a recognized standard time source, e.g. UTC [B6].

IEEE C37.238 provides time quality and traceability via local clockAccuracy and timeTraceable flag as listed in C.1.

timeTraceable flag maps directly into bit[13] of the STAT in the Synchrophasor Data frame. This bit is set if provided time is traceable to UTC.

Mapping between the IEEE C37.118 Time Quality nibble and IEEE C37.238 clockAccuracy is shown in Table C3.

Table C.2— Mapping between IEEE C37.238 clockAccuracy and IEEE C37.118 Time Quality

IEEE C37.238 clockAccuracy		IEEE C37.118 Time Quality nibble	
Value, hex	**Description**	**Value, hex**	**Description (worst case accuracy)**
00-1F, 31-FF	Reserved The time is accurate to >10 s, reserved for profile use	F	Fault--clock failure, time not reliable
30	The time is accurate to within 10 s	B	1 s ≤ time < 10 s
2E, 2F	The time is accurate to within 250 ms - 1 s	A	100 ms ≤ time < 1 s
2C, 2D	The time is accurate to within 25 - 100 ms	9	10 ms ≤ time < 100 ms
2A, 2B	The time is accurate to within 2.5 ms - 10 ms	8	1 ms ≤ time < 10 ms
28, 29	The time is accurate to within 250 μs - 1 ms	7	100 μs ≤ time < 1 ms
26, 27	The time is accurate to within 25 - 100 μs	6	10 μs ≤ time < 100 μs
24, 25	The time is accurate to within 2.5 - 10 μs	5	1 μs ≤ time < 10 μs
22, 23	The time is accurate to within 250 ns - 1 μs	4	100 ns ≤ time < 1 μs
20, 21	The time is accurate to within 25 - 100 ns	3	10 ns ≤ time < 100 ns
-	Not specified	2	1 ns ≤ time < 10 ns
-	Not specified	1	time < 1 ns
-	Not specified	0	reserved

Annex D

(informative)

Use of IEEE C37.238 messages for Slave-Only clocks (IRIG-B replacement)

It is recommended that slave-only clocks use the IEEE C37.238 message bytes as described below. (IEEE C37.238 compliant devices provide all these bytes).

NOTE—For this annex, a frame's bytes' positions are designated by the integer B_n, with n starts at 0 for the byte after the frame's Ether Type field.

D.1 Use of received IEEE C37.238 Sync and Follow_Up messages to obtain a PTP Time

IEEE C37.238 Sync messages are Ethernet frames with:

a. A Destination MAC Address of 01-1B-19-00-00-00

b. An EtherType field of $88F7_{16}$

c. $B_0 = 00_{16}$ (identifier for IEEE C37.238 Sync messages)

d. B_2, $B_3 = 44_{10}$ (indicates the message has 44 bytes).

If $B_6[1]=0$ the PTP Timestamp (the time when the IEEE C37.238 Sync message entered the link cable, as the number of seconds since the start of 1970) comprises the sum of the following three fields of the IEEE C37.238 Sync message:

- The 48-bit unsigned-integer B_{34} through B_{39} (in seconds), this is the originTimestamp's 48 most-significant bits.

- The 32-bit unsigned-integer B_{40} through B_{43} (in nanoseconds), this is the originTimestamp's 32 least-significant bits.

- The 64-bit signed-integer B_8 through B_{15} (in 2-16 nanoseconds), this is the 64-bit correctionField.

If $B_6[1]=1$ the PTP Time (the time when the IEEE C37.238 Sync message entered the link cable, as the number of seconds since the start of 1970) comprises the sum of the IEEE C37.238 Sync message's 64-bit correctionField B_8 through B_{15} (in 2-16 nanoseconds), plus the following three fields of the next received IEEE C37.238 Follow_Up message (same bytes except $B_0 = 08_{16}$):

- The 48-bit unsigned-integer B_{34} through B_{39} (in seconds).

- The 32-bit unsigned-integer B_{40} through B_{43} (in nanoseconds).

- The 64-bit signed-integer B_8 through B_{15} (in 2-16 nanoseconds).

D.2 Use of received IEEE C37.238 Announce messages to determine UTC time and Local time

NOTE—Each IEEE C37.238 Announce message comprises an IEEE Std 1588-2008 Announce message, extended using an IEEE Std 1588-2008 ALTERNATE_TIME_OFFSET_INDICATOR TLV (for local time), followed by an ORGANIZATION_EXTENSION TLV (for GRANDMASTER_ID).

IEEE C37.238 Announce messages are Ethernet frames with:

(a) A Destination MAC Address of 01-1B-19-00-00-00

(b) An EtherType field of $88F7_{16}$

(c) $B_0 = 0B_{16}$ (identifier for IEEE C37.238 Announce messages)

(d) B_2, $B_3 = 108_{10}$ (indicates the message has 108 bytes).

D.2.1 Determining UTC time

The frame's bytes $B_{44}B_{45}$ have the number of seconds to be subtracted (from the PTP Timestamp) to get UTC time.

If the frame's byte $B_7[2]$ is set, the above shall be considered invalid.

D.2.2 Determining future leap-second adjustments to UTC time

If the frame's byte $B_7[0]$ is set, the last minute of the current UTC day will have 61 seconds.

If the frame's byte $B_7[1]$ is set, the last minute of the current UTC day will have 59 seconds.

D.2.3 Determining Local time

Check that bytes $B_{64}B_{65}$ = '0009_{16}' (flags the IEEE Std 1588-2008 TLV for Local time).

Check that bytes $B_{66}B_{67}$ = '$001C_{16}$' (for a fixed-length (32 bytes) TLV).

Ignore B_{68}

The signed 32-bit field currentOffset comprising B_{69} through B_{72} is added to the UTC time to get Local time.

D.2.4 Determining Daylight-time events

A non-zero signed-32-bit field jumpSeconds comprising B_{73} through B_{76} indicates that when the PTP seconds-field becomes the unsigned-48-bit field timeOfNextJump comprising B_{77} through B_{82}, the currentOffset is incremented by jumpSeconds.

NOTE—To tolerate the network delay of IEEE C37.238 Announce messages, since the currentOffset field may be incorrect this field should be ignored for a few seconds after an event.

D.2.5 Determining Name of Local Time

Bytes B_{83} up to B_{94} encode the name of the local time (e.g. "PDST") using 16-bit ASCII which is the Basic Latin block specified by ISO/IEC 10646 [B8] for UTF-8 (to conform with IEEE Std 1588-2008).

If the number of characters is less than 6 (the maximum), the unused bytes are set to '00_{16}'.

Reference: http://www.cs.tut.fi/~jkorpela/ucs.html8

Examples of UTF-8 codes are given in Table D1.

Table D.1— Examples of UTF-8 codes

Block	Codes (hex)	Sample characters
General Scripts Area		
C0 Controls and Basic Latin (ASCII)	0000-007F	A B C D a b c d
C1 Controls and Latin-1 Supplement	0080-00FF	à é ö û ç æ ¿ £
Latin Extended-A	0100-017F	ā ĉ š ź ţ ů ŵ Ł
Greek and Coptic	0370-03FF	A B Γ Δ α β γ δ
Cyrillic	0400-04FF	А Б В Г а б в г

The last IEEE C37.238 Announce message byte, B_{95}, are set to '00_{16}'.

D.3 Use of received IEEE C37.238 Announce messages to determine the time's quality

D.3.1 Valid-Time flags

Check that the frame's B_7[3] bit is set (denotes timescale is PTP)

Check that the frame's B_7[4] bit is set (denotes that time is traceable to a recognized standard time source, e.g. GPS signal is present)

D.3.2 Time Accuracy

B_{49} provides some information on the accuracy of the received time, e.g. 23_{16} for 1us, 25_{16} for 10us, 29_{16} for 1ms. See the Annex C for the mapping table, and refer to the IEEE C37.118-2005 Synchrophasor standard and to the IEEE Std 1588-2008 for the full accuracy encoding tables.

D.3.3 Determining the Grandmaster clock sourcing the time

Check that bytes $B_{96}B_{97}$ = '0003_{16}' (flags the IEEE C37.238 TLV for GRANDMASTER_ID).

Check that bytes $B_{98}B^{99}$ = '0008_{16}' (for a fixed-length (8 bytes) TLV).

Check that bytes $B1_{00}B1_{01}B1_{02}$ = '$1C129D_{24}$' (OUI from IEEE for IEEE C37.238).

Check that bytes $B1_{03}B1_{04}B1_{05}$ = '000001_{24}'

Ignore $B1_{06}$

Use $B1_{07}$ to identify the Grandmaster clock sourcing the received PTP time.

Annex E

(informative)

Use of IEEE C37.238 for IEC 62439-3

E.1 Overview

This annex specifies the mapping of the IEEE C37.238 time distribution to the protocols defined by IEC 62439-3, namely Parallel Redundancy Protocol (PRP) and High-availability Seamless Redundancy (HSR) [B4]. PRP is a redundant protocol applied to devices connected to two independent and parallel Local Area Networks (LANs). HSR is a ring redundancy protocol. Both protocols are based on data duplication on each link and simultaneous sending of the information to provide seamless recovery, i.e. zero recovery time, in case of a single failure of an inter-switch link or a switch in the network.

E.2 PRP Mapping

A double attached node implementing PRP, (DANP) implements an ordinary clock with the property that both ports of the DANP are handled as a single aggregated port. This implies only one port state machine and both ports always have the same state.

A Grandmaster should always be attached to a RedBox or natively support the PRP protocol by duplicating the sending of all its IEEE C37.238 messages over both paths.

NOTE 1—Grandmaster time stamp logic over PRP should be adjusted correctly. For example single IEEE C37.238 Sync message from PTP stack will results in 2 timestamp events (one per PRP port). If PRP supports two-step clock then DANP nodes must be port aware and correlate IEEE C37.238 Sync and Follow_Up messages on the same port.

A PRP redundancy box (RedBox) implements either:

- a peer-to-peer transparent clock and may include an ordinary clock if the local applications require synchronization

- a boundary clock with the non-redundant port being the master port and the two other redundant ports are slave ports, or vice versa.

NOTE 2—In a cascaded network, e.g., a network made of multiple RedBoxes in series, the peer-to-peer transparent clock implementation should be preferred in order to avoid the cumulative effect of cascading servo loops implemented by each boundary clock.

All IEEE C37.238 messages, except Pdelay messages, i.e. Pdelay_Req, Pdelay_Resp, Pdelay_Follow_Up, need to include the PRP Redundancy Control Trailer (RCT) four-octet field at the end of the frame. This trailer shall not be removed by the transparent clocks in the redundant networks. The source address given by the PTP grandmaster shall not be changed. These rules imply that there are no boundary clocks in the redundant networks unless the boundary clock is connected to the two PRP links.

IEEE C37.238 Pdelay messages do not follow the PRP rules, i.e. no duplicate sending and no discarding at the receiver side, and are dedicated to one specific link between two devices.

One-step or two-step clocks can be implemented on PRP. It is however recommended to implement a homogeneous PRP network, i.e. either one-step or two-step clock but not a mix of both.

Figure E.1 illustrates the different IEEE C37.238 messages on a typical PRP network with the Grandmaster connected to the PRP network through a RedBox.

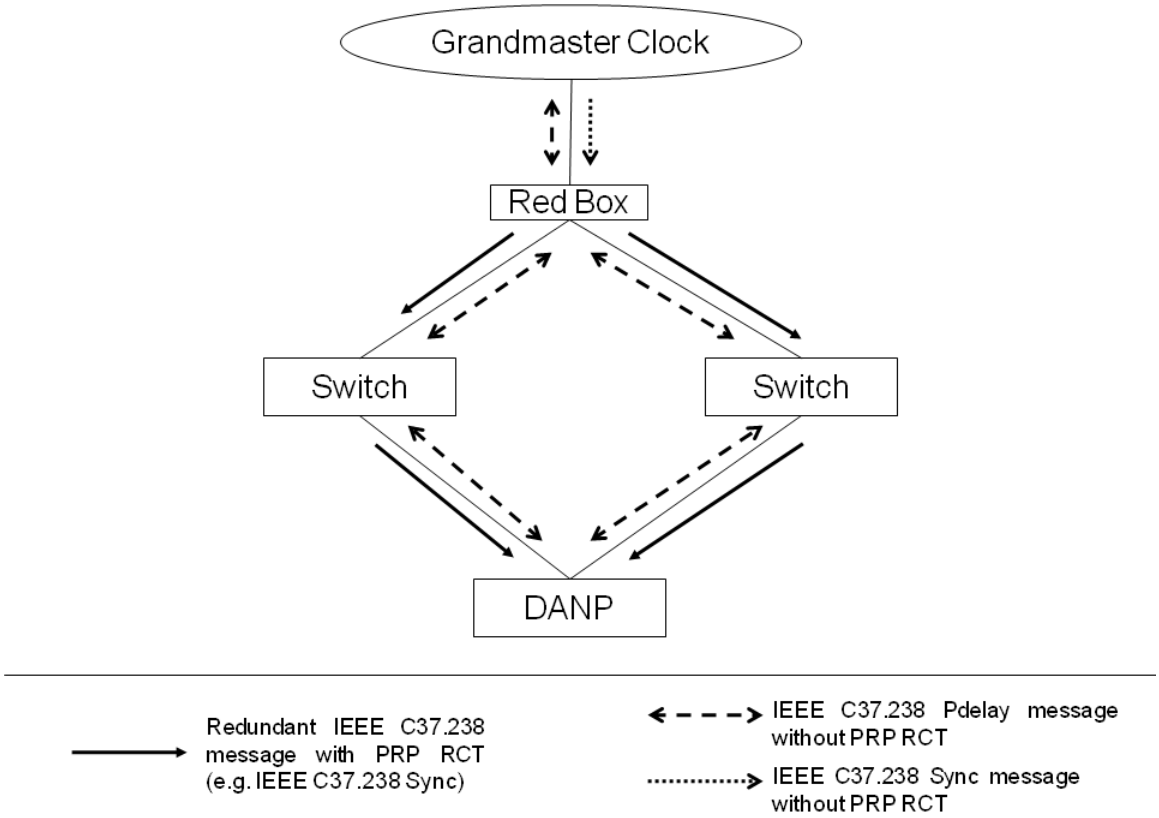

Figure E.1—IEEE C37.238 messages in PRP network

E.3 HSR Mapping

All HSR devices are hybrid clocks, made of at least of a transparent clock and an ordinary clock. The ordinary clock is either in the grandmaster, slave or slave-only mode. All HSR devices do not require to be synchronized but need to be syntonized if the maximum cumulative error of all devices' residence time exceeds 1 microsecond. As an example, a HSR ring made of 50 HSR nodes, each with a 100ppm clock, has a maximum cumulated error of 0.6 microseconds, assuming a 100 Mbits/sec network and a maximum frame length of 1542 octets (frame length and inter frame gap).

One-step clock mode is the preferred mode for all devices involved in an HSR network.
Both ports of a device belonging to the same HSR network are in the same state, i.e. either slave or grandmaster.

All devices within the ring have to be HSR-capable.

If an HSR node is also connected to a network outside the ring, i.e. a RedBox, the HSR node can implement a boundary clock or a transparent clock between the two HSR ports and the outside port. The outside port can be either slave or grandmaster, and can implement either a one-step or two-step clock.

IEEE C37.238 Pdelay messages are exchanged by all devices in a HSR network, even by the slave-only devices. The IEEE C37.238 Pdelay messages do not follow the HSR rules, and are only exchanged between two devices directly connected. Therefore, IEEE C37.238 Pdelay messages do not contain any HSR tag. Upon reception of a IEEE C37.238 Pdelay_Req or a Pdelay_Resp message, the HSR device does not forward the message to its other HSR ports, but may forward it to its host port.

All IEEE C37.238 messages, except Pdelay messages, are following the HSR rules and handled like any other HSR traffic.

In addition to the IEEE Std 1588-2008 Ethertype, all IEEE C37.238 messages, except Pdelay messages, have the HSR Ethertype, 0x88FB, in the HSR tag.

Figure E.2 illustrates the paths of the different IEEE C37.238 messages in a HSR ring network.

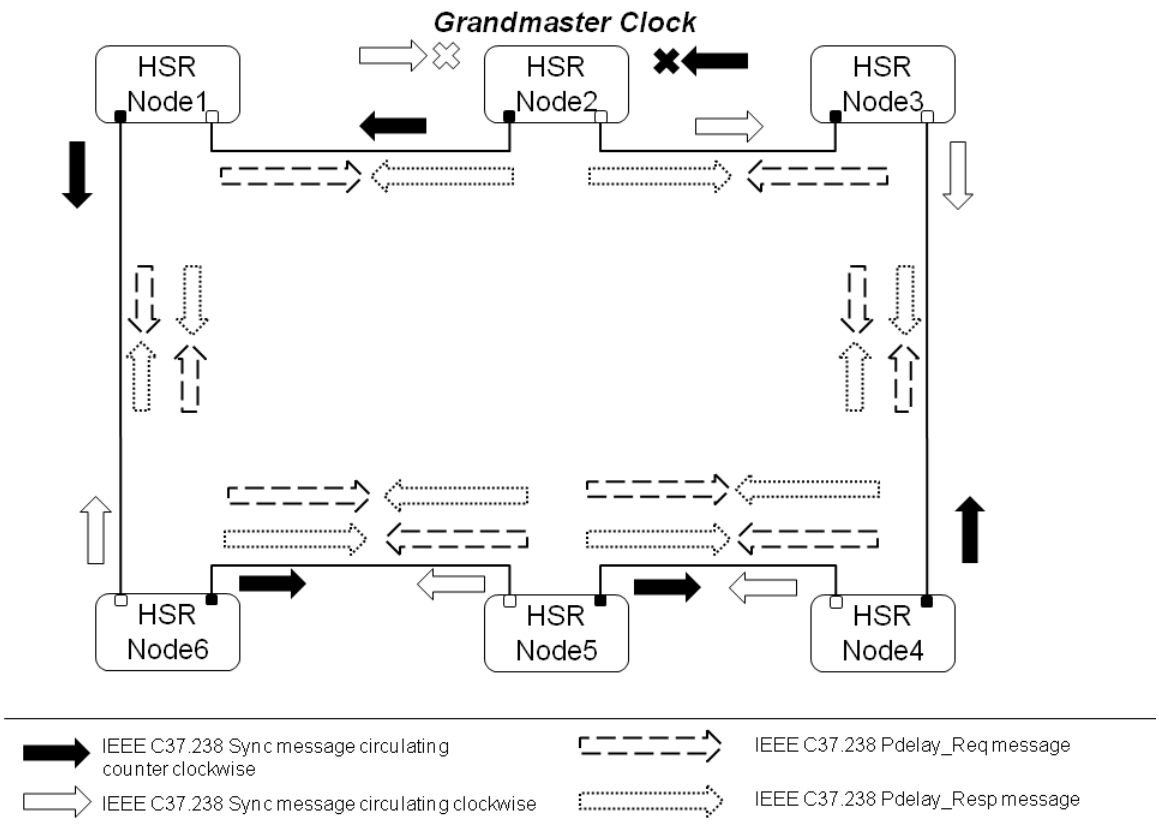

Figure E.2—IEEE C37.238 messages in HSR ring network

Annex F

(normative)

Management Information Base

```
IEEEC37-238-MIB DEFINITIONS ::= BEGIN
--=====================================================================
-- MIB for support of IEEE C37.238 Standard Profile for Use of
-- IEEE 1588 Precision Time Protocol in Power System Applications
--=====================================================================
IMPORTS

    MODULE-IDENTITY, OBJECT-TYPE, NOTIFICATION-TYPE, Unsigned32,
Integer32
        FROM SNMPv2-SMI                     -- [RFC2578]
    TEXTUAL-CONVENTION, TruthValue
        FROM SNMPv2-TC                      -- [RFC2579]
    MODULE-COMPLIANCE, OBJECT-GROUP, NOTIFICATION-GROUP -- [RFC2580]
       FROM SNMPv2-CONF
   ifGeneralInformationGroup
       FROM IF-MIB;                         -- [RFC2863]

ieeeC37238TSMib         MODULE-IDENTITY
    LAST-UPDATED "201009150000Z"    -- Sept 15, 2010
    ORGANIZATION "IEEE PSRC / SUB Working Group H7/SubC7"
    CONTACT-INFO
                        "WG-URL: http://www.pes-psrc.org/h/
                         WG-EMail:
                         Contact: Galina S. Antonova
                         Postal:  600-3731 North Fraser Way
                         Burnaby, BC V5J 5J2 Canada
                         E-mail:  galina.antonova@ieee.org"

    DESCRIPTION
                       "The Management Information Base module for
                        IEEE C37.238 time synchronization protocol."

    REVISION     "201009150000Z" -- Sept 15, 2010
    DESCRIPTION
         "Published as part of IEEE PC37.238 Draft D5.5
          Copyright (C) IEEE (2010)."

-- IEEE C37.238 MIB info.
   ::= { iso(1) org(3) ieee(111) standards-association-c-series-
standards (3) std-c37 (37) part238 (238) 9999 }

ieeeC37238Notifications  OBJECT IDENTIFIER ::= { ieeeC37238TSMib 0 }
ieeeC37238Objects        OBJECT IDENTIFIER ::= { ieeeC37238TSMib 1 }
ieeeC37238Conformance    OBJECT IDENTIFIER ::= { ieeeC37238TSMib 2 }

--=====================================================================
-- Textual Conventions
--=====================================================================
```

```
ClockIdentity ::= TEXTUAL-CONVENTION
    DISPLAY-HINT
        "1x:"
    STATUS current
    DESCRIPTION
      "IEEE 802 MAC address represented in the `canonical' order,
EUI-64.  EUI-48 converts to EUI-64 as specified by IEEE."
    REFERENCE  "IEEE Std 1588-2008 5.3.4 and 7.5.2.2"
    SYNTAX OCTET STRING (SIZE (8))

IEEEC37238ClockClassValue ::= TEXTUAL-CONVENTION
    STATUS  current
    DESCRIPTION
      "Clock Class Value from IEEE Std 1588-2008 7.6.2.4, with the
following interpretation placed on the value:
         6: A clock that is synchronized to a primary reference
            time source,
         7: A clock that has previously been designated as clockClass
            6  but that has lost the ability to synchronize to primary
            reference time source and is in holdover mode and within
            holdover specifications,
        13: A clock that is synchronized to an application-specific
            source of time,
        14: A clock that has previously been designated as clockClass13
            but that has lost the ability to synchronize to an
            application-specific source of time and is in holdover mode
            and within holdover specifications,
        52: Degradation alternative A for a clock of clockClass 7 that
            is not within holdover specification,
        58: Degradation alternative A for a clock of clockClass 14 that
            is not within holdover specification,
        68..122: For use by alternate PTP profiles (68..122),
       133..170: For use by alternate PTP profiles (133..170),
       187: Degradation alternative B for a clock of clockClass 7 that
            is not within holdover specification,
       193: Degradation alternative B for a clock of clockClass 14 that
            is not within holdover specification,
       216..232: For use by alternate PTP profiles,
       248:  Default none of the other clockClass definitions apply,
       255:  A slave-only clock(255)."
    REFERENCE  "IEEE Std 1588-2008 7.6.2.4"
    SYNTAX  INTEGER {
        primarySync(6),
        primarySyncLost(7),
        applicationSpecificSync(13),
        applicationSpecficSyncLost(14),
        primarySyncAlternativeA(52),
        applicationSpecificAlternativeA(58),
        primarySyncAlternativeB(187),
        applicationSpecficAlternativeB(193),
        default(248),
        slaveOnlyClock(255)
        }

IEEEC37238ClockAccuracyValue ::= TEXTUAL-CONVENTION
    STATUS  current
    DESCRIPTION
```

```
        "Clock Accuracy Value from IEEE Std 1588-2008 8.6.2.3, with the
following interpretation placed on the value:
          32: The time is accurate to within 25 ns,
          33: The time is accurate to within 100 ns,
          34: The time is accurate to within 250 ns,
          35: The time is accurate to within 1 us,
          36: The time is accurate to within 2.5 us,
          37: The time is accurate to within 10 us,
          38: The time is accurate to within 25 us,
          39: The time is accurate to within 100 us,
          40: The time is accurate to within 250 us,
          41: The time is accurate to within 1 ms,
          42: The time is accurate to within 2.5 ms,
          43: The time is accurate to within 10 ms,
          44: The time is accurate to within 25 ms,
          45: The time is accurate to within 100 ms,
          46: The time is accurate to within 250 ms,
          47: The time is accurate to within 1 s,
          48: The time is accurate to within 10 s,
          49: The time is accurate to within > 10 s,
         254: Default indicating unknown"
    REFERENCE  "IEEE Std 1588-2008 7.6.2.5 and Table 6"
    SYNTAX     INTEGER {
        timeAccurateTo25ns(32),
        timeAccurateTo100ns(33),
        timeAccurateTo250ns(34),
        timeAccurateTo1us(35),
        timeAccurateTo2to5us(36),
        timeAccurateTo10us(37),
        timeAccurateTo25us(38),
        timeAccurateTo100us(39),
        timeAccurateTo250us(40),
        timeAccurateTo1ms(41),
        timeAccurateTo2to5ms(42),
        timeAccurateTo10ms(43),
        timeAccurateTo25ms(44),
        timeAccurateTo100ms(45),
        timeAccurateTo250ms(46),
        timeAccurateTo1s(47),
        timeAccurateTo10s(48),
        timeAccurateToGT10s(49),
        timeAccurateToUnknown(254)
        }

IEEEC37238TimeSourceValue ::= TEXTUAL-CONVENTION
    STATUS current
    DESCRIPTION
        "The timeSource is an information only attribute indicating
         the type of source of time used by a grandmaster clock.
         The following value are defined:
            16:  Atomic Clock,
            32:  GPS,
            48:  Terrestrial Radio,
            64:  PTP,
            80:  NTP,
            96:  Hand Set,
           144:  Other,
```

```
            160:  Internal Oscillator"
    REFERENCE "IEEE Std 1588-2008 7.6.2.6 and Table 7"
    SYNTAX INTEGER {
        atomicClock(16),
        gps(32),
        terrestrialRadio(48),
        ptp(64),
        ntp(80),
        handSet(96),
        other(144),
        internalOscillator(160)
        }

Integer48 ::= TEXTUAL-CONVENTION
            DISPLAY-HINT  "12d"
            STATUS current
            DESCRIPTION
                "48bit Integer value"
            SYNTAX OCTET STRING (SIZE (6))

--=====================================================================
-- Subtrees in the IEEEC37-238-MIB IEEE C37.238 system Parameters
--=====================================================================

--=====================================================================
--   The Default data set represents native time capability of a IEEE
--   C37.238 system
--=====================================================================

ieeeC37238DefaultDS OBJECT IDENTIFIER ::= { ieeeC37238Objects 1 }

ieeeC37238DefaultDSTwoStepFlag OBJECT-TYPE
    SYNTAX  TruthValue
    MAX-ACCESS  read-write
    STATUS  current
    DESCRIPTION
      "True if the clock is a two-step clock, False otherwise."
    REFERENCE  "IEEE Std 1588-2008 8.2.1.2.1"
    ::= { ieeeC37238DefaultDS 1 }

ieeeC37238DefaultDSClkIdentity OBJECT-TYPE
    SYNTAX  ClockIdentity
    MAX-ACCESS  read-only
    STATUS  current
    DESCRIPTION
      "ClockIdentity of the local clock"
    REFERENCE  "IEEE Std 1588-2008 7.6.2.1 and 8.2.1.2.2"
    ::= { ieeeC37238DefaultDS 2 }

ieeeC37238DefaultDSNumberPorts OBJECT-TYPE
    SYNTAX  Unsigned32(0..255)
    MAX-ACCESS  read-only
    STATUS  current
    DESCRIPTION
      "The number of PTP ports on the device. For an ordinary clock,
this value shall be 1."
    REFERENCE  "IEEE Std 1588-2008 8.2.1.2.3"
```

```
    ::= { ieeeC37238DefaultDS 3 }

ieeeC37238DefaultDSClkClass OBJECT-TYPE
    SYNTAX  IEEEC37238ClockClassValue
    MAX-ACCESS  read-only
    STATUS  current
    DESCRIPTION
      "ClockClass of the local clock."
    REFERENCE           "IEEE Std 1588-2008 7.6.2.4 and 8.2.1.3.1"
    ::= { ieeeC37238DefaultDS 4 }

ieeeC37238DefaultDSClkAccuracy OBJECT-TYPE
    SYNTAX  IEEEC37238ClockAccuracyValue
    MAX-ACCESS  read-only
    STATUS  current
    DESCRIPTION
      "ClockAccuracy of the local clock."
    REFERENCE  "IEEE Std 1588-2008 8.2.1.3.1.2"
    ::= { ieeeC37238DefaultDS 5 }

ieeeC37238DefaultDSOfsScdLogVar OBJECT-TYPE
    SYNTAX  Integer32(-32768..32767)

    MAX-ACCESS  read-only
    STATUS  current
    DESCRIPTION
      "The value is scaled, offset representation of an estimate of the
PTP variance. The PTP variance characterizes the precision and
frequency stability of the grandmaster clock."
    REFERENCE  "IEEE Std 1588-2008 8.2.1.3.1.3"
    ::= { ieeeC37238DefaultDS 6 }

ieeeC37238DefaultDSPriority1 OBJECT-TYPE
    SYNTAX  Unsigned32(0..255)
    MAX-ACCESS  read-write
    STATUS  current
    DESCRIPTION
    "Priority1 attribute of the local clock."
    REFERENCE  "IEEE Std 1588-2008 7.6.2.2 and 8.2.1.4.1"
    ::= { ieeeC37238DefaultDS 7 }

ieeeC37238DefaultDSPriority2 OBJECT-TYPE
    SYNTAX  Unsigned32
    MAX-ACCESS  read-write
    STATUS  current
    DESCRIPTION
      "Priority2 attribute of the local clock."
    REFERENCE  "IEEE Std 1588-2008 7.6.2.3 and 8.2.1.4.2"
    ::= { ieeeC37238DefaultDS 8 }
ieeeC37238DefaultDSDomainNumber OBJECT-TYPE
    SYNTAX  Integer32
    MAX-ACCESS  read-write
    STATUS  current
    DESCRIPTION
      "Default domain of the local clock"
    REFERENCE  "IEEE Std 1588-2008 7.1 and 8.2.1.4.3"
    ::= { ieeeC37238DefaultDS 9 }
```

```
ieeeC37238DefaultDSSlaveOnly OBJECT-TYPE
    SYNTAX  TruthValue
    MAX-ACCESS  read-write
    STATUS  current
    DESCRIPTION
      "True if the local clock is a slave-only clock, False otherwise."
    REFERENCE  "IEEE Std 1588-2008 9.2.2, 9.2.3 and 8.2.1.4.4"
    ::= { ieeeC37238DefaultDS 10 }

ieeeC37238DefaultDSGMIdentity OBJECT-TYPE
    SYNTAX  Integer32
    MAX-ACCESS  read-write
    STATUS  current
    DESCRIPTION
      "Grandmaster Identity to be transmitted in GRANDMASTER_ID TLV.
       Configurable for grandmaster-capable devices only."
    ::= { ieeeC37238DefaultDS 11 }

ieeeC37238DefaultDSOfstFrMLimitM OBJECT-TYPE
    SYNTAX  Integer32
    UNITS "2**-16 ns * 2**64"
    MAX-ACCESS  read-write
    STATUS  current
    DESCRIPTION
      "Offset from Master Limit to generate OfstExceedsLimit event. The
most signigicant 4 bytes."
    ::= { ieeeC37238DefaultDS 12 }

ieeeC37238DefaultDSOfstFrMLimitL OBJECT-TYPE
    SYNTAX  Integer32
    UNITS "2**-16 ns * 2**64"
    MAX-ACCESS  read-write
    STATUS  current
    DESCRIPTION
      "Offset from Master Limit to generate OfstExceedsLimit event. The
least significant 4 bytes."
    ::= { ieeeC37238DefaultDS 13 }

--=====================================================================
-- The Current data set represents this system’s topological location
-- relative to the known Grandmaster system.
--=====================================================================

ieeeC37238CurrentDS OBJECT IDENTIFIER ::= { ieeeC37238Objects 2 }

ieeeC37238CurrentDSStepsRemoved OBJECT-TYPE
    SYNTAX  Integer32(-32768..32767)
    MAX-ACCESS  read-only
    STATUS  current
    DESCRIPTION
      "The number of communication paths traversed between the local
clock and the grandmaster clock. The initialization value shall be 0."
    REFERENCE  "IEEE Std 1588-2008 8.2.2.2"
    DEFVAL { 0 }
    ::= { ieeeC37238CurrentDS 1 }
```

```
ieeeC37238CurrentDSOfstFrMasterM OBJECT-TYPE
    SYNTAX Integer32
    UNITS "2**-16 ns * 2**64"
    MAX-ACCESS  read-only
    STATUS  current
    DESCRIPTION
       "Implementation-specific representation of the current value of
the time difference between a master and a slave as computed by the
slave; i.e., <offsetFromMaster> = <Time on the slave clock> ? <Time on
the master clock>. The most significant 4 bytes. The data type should
be TimeInterval."
    REFERENCE  "IEEE Std 1588-2008 8.2.2.3"
    ::= { ieeeC37238CurrentDS 2 }

ieeeC37238CurrentDSOfstFrMasterL OBJECT-TYPE
    SYNTAX Integer32
    UNITS "2**-16 ns * 2**64"
    MAX-ACCESS  read-only
    STATUS  current
    DESCRIPTION
        "Implementation-specific representation of the current value of
the time difference between a master and a slave as computed by the
slave; i.e., <offsetFromMaster> = <Time on the slave clock> ? <Time on
the master clock>. The least significant 4 bytes. The data type should
be TimeInterval."
    REFERENCE  "IEEE Std 1588-2008 11.2 and 8.2.2.3"
    ::= { ieeeC37238CurrentDS 3 }

--=====================================================================
-- The Parent data set represents timing towards Grandmaster system's
-- parameters as measured at this system.
--=====================================================================

ieeeC37238ParentDS  OBJECT IDENTIFIER ::= { ieeeC37238Objects 3 }

ieeeC37238ParentDSClkIdentity OBJECT-TYPE
    SYNTAX ClockIdentity
    MAX-ACCESS read-only
    STATUS current
    DESCRIPTION
         "Clock Identity of the master that synchronizes this clock."
    REFERENCE "IEEE Std 1588-2008 8.2.3.2"
    ::= { ieeeC37238ParentDS 1 }

ieeeC37238ParentDSPortNumber OBJECT-TYPE
    SYNTAX Unsigned32(0..65535)
    MAX-ACCESS read-only
    STATUS current
    DESCRIPTION
         "Port Number of the port on the master that issues the Sync
messages used in synchronizing this clock."
    REFERENCE "IEEE Std 1588-2008 8.2.3.2"
    DEFVAL { 0 }
    ::= { ieeeC37238ParentDS 2 }

ieeeC37238ParentDSStats OBJECT-TYPE
    SYNTAX TruthValue
```

```
    MAX-ACCESS read-only
    STATUS current
    DESCRIPTION
         "True if all of the following 2 conditions are satisfied:
            - The clock has a port in the SLAVE state.
            - The clock has computed statistically valid estimates of
            parentDS.observedParentOffsetScaledLog Variance and the
            parentDS.observedParentClockPhaseChangeRate members.
            False otherwise. The initialization value shall be FALSE."
    REFERENCE "IEEE Std 1588-2008 8.2.3.3"
    DEFVAL { false }
    ::= { ieeeC37238ParentDS 3 }

ieeeC37238ParentDSObsOfstScdLVar OBJECT-TYPE
    SYNTAX Unsigned32(0..65535)
    MAX-ACCESS read-only
    STATUS current
    DESCRIPTION
         "An estimate of the parent clock PTP variance as observed by
the slave clock, computed and represented as described in IEEE Std
1588-2008 7.6.3.5. The initialization value shall be FFFF."
    REFERENCE "IEEE Std 1588-2008 7.6.3.3, 7.6.3.5 and 8.2.3.4"
    DEFVAL { 65535 }
    ::= { ieeeC37238ParentDS 4 }

ieeeC37238ParentDSObsPhChgRate OBJECT-TYPE
    SYNTAX Unsigned32(0..65535)
    MAX-ACCESS read-only
    STATUS current
    DESCRIPTION
         "An estimate of the parent clock phase change rate as observed
by the slave clock as defined in IEEE Std 1588-2008 7.6.4.4. If the
estimate exceeds the capacity of its data type, this value shall be set
to 7FFF FFFF or 8000 0000, as appropriate. A positive sign indicates
that the parent clock phase change rate is greater than the rate of the
slave clock. The initialization value shall be 7FFF FFFF."
    REFERENCE "IEEE Std 1588-2008 7.6.4.4, 15.5.3.5.1.4 and 8.2.3.5"
    DEFVAL { 65535 }
    ::= { ieeeC37238ParentDS 5 }

ieeeC37238ParentDSGMClkIdentity OBJECT-TYPE
    SYNTAX  ClockIdentity
    MAX-ACCESS  read-only
    STATUS  current
    DESCRIPTION
       "ClockIdentity of the grandmaster clock."
    REFERENCE  "IEEE Std 1588-2008 7.6.2.1 and 8.2.3.6"
    ::= { ieeeC37238ParentDS 6 }

ieeeC37238ParentDSGMClkClass OBJECT-TYPE
    SYNTAX  IEEEC37238ClockClassValue
    MAX-ACCESS  read-only
    STATUS  current
    DESCRIPTION
      "ClockClass of the grandmaster clock."
    REFERENCE  "IEEE Std 1588-2008 8.2.3.7"
    ::= { ieeeC37238ParentDS 7 }
```

```
ieeeC37238ParentDSGMClkAccuracy OBJECT-TYPE
    SYNTAX  IEEEC37238ClockAccuracyValue
    MAX-ACCESS  read-only
    STATUS  current
    DESCRIPTION
      "ClockAccuracy of the grandmaster clock."
    REFERENCE  "IEEE Std 1588-2008 8.2.3.7"
    ::= { ieeeC37238ParentDS 8 }

ieeeC37238ParentDSGMOfstScdLVar OBJECT-TYPE
    SYNTAX Integer32(-32768..32767)
    MAX-ACCESS  read-only
    STATUS  current
    DESCRIPTION
      "OffsetScaledLog Variance of the grandmaster clock."
    REFERENCE  "IEEE Std 1588-2008 8.2.3.7"
    ::= { ieeeC37238ParentDS 9 }

ieeeC37238ParentDSGMPriority1 OBJECT-TYPE
    SYNTAX Unsigned32(0..255)
    MAX-ACCESS read-only
    STATUS current
    DESCRIPTION
      "Priority1 attribute of the grandmaster clock."
    REFERENCE "IEEE Std 1588-2008 8.2.3.8"
    ::= { ieeeC37238ParentDS 10 }

ieeeC37238ParentDSGMPriority2 OBJECT-TYPE
    SYNTAX Unsigned32(0..255)
    MAX-ACCESS read-only
    STATUS current
    DESCRIPTION
        "Priority2 attribute of the grandmaster clock."
    REFERENCE "IEEE Std 1588-2008 8.2.3.9"
    ::= { ieeeC37238ParentDS 11 }

ieeeC37238ParentDSGMIdentity OBJECT-TYPE
    SYNTAX Integer32
    MAX-ACCESS read-only
    STATUS current
    DESCRIPTION
        "Grandmaster Identity received in GRANDMASTER_ID TLV."
    ::= { ieeeC37238ParentDS 12 }

--=====================================================================
-- Time Properties data set represents the grandmaster' parameters, as
-- measured at this system and are derived from IEEE C37.238 protocol.
--=====================================================================

ieeeC37238TimePropDS OBJECT IDENTIFIER ::= { ieeeC37238Objects 4 }

ieeeC37238TimePropDSCurUTCOfst OBJECT-TYPE
    SYNTAX Integer32(-32768..32767)
    MAX-ACCESS read-only
    STATUS current
    DESCRIPTION
         "The current offset between TAI and UTC in units of seconds."
```

```
    REFERENCE "IEEE Std 1588-2008 8.2.4.2"
    ::= { ieeeC37238TimePropDS 1 }

ieeeC37238TimePropDSCurUTCOfstVd OBJECT-TYPE
    SYNTAX TruthValue
    MAX-ACCESS read-only
    STATUS current
    DESCRIPTION
         "True if the the currentUtcOffset is known to be correct."
    REFERENCE "IEEE Std 1588-2008 8.2.4.3"
    ::= { ieeeC37238TimePropDS 2 }

ieeeC37238TimePropDSLeap59 OBJECT-TYPE
    SYNTAX TruthValue
    MAX-ACCESS read-only
    STATUS current
    DESCRIPTION
         "True value indicates that the last minute of the current UTC
day contains 59 seconds."
    REFERENCE "IEEE Std 1588-2008 8.2.4.4"
    ::= { ieeeC37238TimePropDS 3 }

ieeeC37238TimePropDSLeap61 OBJECT-TYPE
    SYNTAX TruthValue
    MAX-ACCESS read-only
    STATUS current
    DESCRIPTION
         "True value indicates that the last minute of the current UTC
day contains 61 seconds."
    REFERENCE "IEEE Std 1588-2008 8.2.4.5"
    ::= { ieeeC37238TimePropDS 4 }

ieeeC37238TimePropDSTmeTraceable OBJECT-TYPE
    SYNTAX TruthValue
    MAX-ACCESS read-only
    STATUS current
    DESCRIPTION
         "True if the timescale and the value of currentUtcOffset are
traceable to a primary reference; False otherwise."
    REFERENCE "IEEE Std 1588-2008 8.2.4.6"
    ::= { ieeeC37238TimePropDS 5 }

ieeeC37238TimePropDSFrqTraceable OBJECT-TYPE
    SYNTAX TruthValue
    MAX-ACCESS read-only
    STATUS current
    DESCRIPTION
         "True if the frequency determining the timescale is
traceable to a primary reference, False otherwise."
    REFERENCE "IEEE Std 1588-2008 8.2.4.7"
    ::= { ieeeC37238TimePropDS 6 }

ieeeC37238TimePropDSPTPTimescale OBJECT-TYPE
    SYNTAX TruthValue
    MAX-ACCESS read-only
    STATUS current
    DESCRIPTION
```

```
        "True if the clock timescale of the grandmaster clock is PTP.
This value shall always be True for IEEE C37.238 compliant
implementations."
    REFERENCE "IEEE Std 1588-2008 7.2.1 and 8.2.4.8"
    ::= { ieeeC37238TimePropDS 7 }

ieeeC37238TimePropDSTimeSource OBJECT-TYPE
    SYNTAX IEEEC37238TimeSourceValue
    MAX-ACCESS read-only
    STATUS current
    DESCRIPTION
        "The source of time used by the grandmaster clock."
    REFERENCE "IEEE Std 1588-2008 8.2.4.9"
    ::= { ieeeC37238TimePropDS 8 }

ieeeC37238TimePropDSLocalTCurOfs OBJECT-TYPE
    SYNTAX Integer32(-32768..32767)
    MAX-ACCESS read-write
    STATUS current
    DESCRIPTION
         "The offset of the alternate time, in seconds, from the node
time. The alternate time is the sum of this value and the node time."
    REFERENCE "IEEE Std 1588-2008 16.3.3.4"
    ::= { ieeeC37238TimePropDS 9 }

ieeeC37238TimePropDSLocalTJumpS OBJECT-TYPE
    SYNTAX Integer32(-32768..32767)
    MAX-ACCESS read-write
    STATUS current
    DESCRIPTION
         "The size of the next discontinuity, in seconds, of the
alternate time. A value of zero indicates that no discontinuity is
expected. A positive value indicates that the discontinuity will cause
the currentOffset of the alternate time to increase."
    REFERENCE "IEEE Std 1588-2008 16.3.3.5"
    ::= { ieeeC37238TimePropDS 10 }

ieeeC37238TimePropDSLocalTNtJump OBJECT-TYPE
    SYNTAX Integer48
    MAX-ACCESS read-write
    STATUS current
    DESCRIPTION
         "The value of the seconds portion of the transmitting node
time at the time that the next discontinuity will occur. The
discontinuity occurs at the start of the second indicated by this
value."
    REFERENCE "IEEE Std 1588-2008 16.3.3.6"
    ::= { ieeeC37238TimePropDS 11 }
ieeeC37238TimePropDSLocalTName OBJECT-TYPE
    SYNTAX  OCTET STRING(SIZE(4))
    MAX-ACCESS  read-write
    STATUS  current
    DESCRIPTION
      "The value of displayName shall be the text name of the alternate
timescale"
    REFERENCE  "IEEE Std 1588-2008 16.3.3.7"
    ::= { ieeeC37238TimePropDS 12 }
```

```
ieeeC37238TimePropDSLeapEvLatest OBJECT-TYPE
    SYNTAX  Integer48
    MAX-ACCESS  read-write
    STATUS  current
    DESCRIPTION
      "The seconds portion of PTP time for the second prior to the
latest IERS-announced leap-second event (may be past or future)."
    ::= { ieeeC37238TimePropDS 13 }

ieeeC37238TimePropDSUTCOfstNext OBJECT-TYPE
    SYNTAX  Integer32(-32768..32767)
    MAX-ACCESS  read-write
    STATUS  current
    DESCRIPTION
      "Seconds offset between TAI and UTC timescales after
LeapEvLatest(same as CurUTCOfst after LeapEvLatest time)."
    ::= { ieeeC37238TimePropDS 14 }

ieeeC37238TimePropDSLeapEvExpiry OBJECT-TYPE
    SYNTAX  Integer48
    MAX-ACCESS  read-write
    STATUS  current
    DESCRIPTION
      "The seconds portion of PTP time for the expiry of the latest
IERS-announced leap-second event. If PTP time > LeapEvExpiry, devices
shall set CurUTCOfstVd to False."
    ::= { ieeeC37238TimePropDS 15 }

--=====================================================================
-- Port data set parameters for each IEEE C37.238 capable port.
--=====================================================================

ieeeC37238PortDSIfTable OBJECT-TYPE
    SYNTAX SEQUENCE OF IeeeC37238PortDSIfEntry
    MAX-ACCESS not-accessible
    STATUS current
    DESCRIPTION
         "A table of port related variables. A value of 1 is used
          in device that does not have multiple ports."
    ::= { ieeeC37238Objects 5 }

ieeeC37238PortDSIfEntry OBJECT-TYPE
    SYNTAX IeeeC37238PortDSIfEntry
    MAX-ACCESS not-accessible
    STATUS current
    DESCRIPTION
         "A list of objects pertaining to a port."
    INDEX { ifIeeeC37238PortDSifIndex }
    ::= { ieeeC37238PortDSIfTable 1 }

IeeeC37238PortDSIfEntry ::=
    SEQUENCE {
        ifIeeeC37238PortDSifIndex              Unsigned32,
        ifIeeeC37238PortDSClkIdentity          ClockIdentity,
        ifIeeeC37238PortDSPortNumber           Unsigned32,
        ifIeeeC37238PortDSPortState            INTEGER,
```

```
          ifIeeeC37238PortDSMPathPDlyM            Integer32,
          ifIeeeC37238PortDSMPathPDlyL            Integer32,
          ifIeeeC37238PortDSLogAnnounceInt        Integer32,
          ifIeeeC37238PortDSAnnounceRcTout        Unsigned32,
          ifIeeeC37238PortDSLogSyncInt            Integer32,
          ifIeeeC37238PortDSDelayMech             INTEGER,
          ifIeeeC37238PortDSLogMinPdlyRInt        Integer32,
          ifIeeeC37238PortDSVersionNumber         Unsigned32,
          ifIeeeC37238PortDSPtpPortEnabled        TruthValue,
          ifIeeeC37238PortDSDlyAsymmetryM         Integer32,
          ifIeeeC37238PortDSDlyAsymmetryL         Integer32,
          ifIeeeC37238PortDSProfileId             INTEGER,
          ifIeeeC37238PortDSNetProtocol           INTEGER,
          ifIeeeC37238PortDSVlanId                Unsigned32,
          ifIeeeC37238PortDSPriority              Unsigned32
        }

ifIeeeC37238PortDSifIndex OBJECT-TYPE
    SYNTAX Unsigned32(0..65535)
    MAX-ACCESS not-accessible
    STATUS current
    DESCRIPTION
       "Index for PortDS Table"
    ::= { ieeeC37238PortDSIfEntry 1 }

ifIeeeC37238PortDSClkIdentity OBJECT-TYPE
    SYNTAX ClockIdentity
    MAX-ACCESS read-only
    STATUS current
    DESCRIPTION
         "Clock Identity of the local clock."
    REFERENCE "IEEE Std 1588-2008 8.2.5.2.1"
    ::= { ieeeC37238PortDSIfEntry 2 }

ifIeeeC37238PortDSPortNumber OBJECT-TYPE
    SYNTAX Unsigned32(0..65535)
    MAX-ACCESS read-only
    STATUS current
    DESCRIPTION
         "Port Number of the local port."
    REFERENCE "IEEE Std 1588-2008 8.2.5.2.1"
    ::= { ieeeC37238PortDSIfEntry 3 }

ifIeeeC37238PortDSPortState OBJECT-TYPE
    SYNTAX INTEGER {
        initalizing     (1),
        faulty          (2),
        disabled        (3),
        listening       (4),
        premaster       (5),
        master          (6),
        passive         (7),
        uncalibrated    (8),
        slave           (9)
      }
    MAX-ACCESS read-only
    STATUS current
```

```
    DESCRIPTION
        "The current state of the PTP protocol engine associated with
this port."
    REFERENCE "IEEE Std 1588-2008 8.2.5.2.1 and Table 8"
    DEFVAL { 3 }
    ::= { ieeeC37238PortDSIfEntry 4 }

ifIeeeC37238PortDSMPathPDlyM OBJECT-TYPE
    SYNTAX Integer32
    MAX-ACCESS read-only
    STATUS current
    DESCRIPTION
      "An estimate of the current one-way propagation delay on the
link, attached to this port computed using the peer delay mechanism.
The most significant 4 bytes. The initialization value shall be zero."
    REFERENCE "IEEE Std 1588-2008 11.4 and 8.2.5.3.3"
    ::= { ieeeC37238PortDSIfEntry 5 }

ifIeeeC37238PortDSMPathPDlyL OBJECT-TYPE
    SYNTAX Integer32
    MAX-ACCESS read-only
    STATUS current
    DESCRIPTION
      "An estimate of the current one-way propagation delay on the
link, attached to this port computed using the peer delay mechanism.
The least significant 4 bytes. The initialization value shall be zero."
    REFERENCE "IEEE Std 1588-2008 11.4 and 8.2.5.3.3"
    ::= { ieeeC37238PortDSIfEntry 6 }

ifIeeeC37238PortDSLogAnnounceInt OBJECT-TYPE
    SYNTAX Integer32(-128..127)
    MAX-ACCESS read-write
    STATUS current
    DESCRIPTION
      "The logarithm to the base 2 of the mean announceInterval."
    REFERENCE "IEEE Std 1588-2008 7.7.2.2 and 8.2.5.4.1"
    DEFVAL { 0 }
    ::= { ieeeC37238PortDSIfEntry 7 }

ifIeeeC37238PortDSAnnounceRcTout OBJECT-TYPE
    SYNTAX Unsigned32(0..255)
    MAX-ACCESS read-write
    STATUS current
    DESCRIPTION
      "The AnnounceReceiptTimeout, an integral multiple of
announceInterval."
    REFERENCE "IEEE Std 1588-2008 7.7.3.1 and 8.2.5.4.2"
    DEFVAL { 3 }
    ::= { ieeeC37238PortDSIfEntry 8 }

ifIeeeC37238PortDSLogSyncInt OBJECT-TYPE
    SYNTAX Integer32 (-128..127)
    MAX-ACCESS read-write
    STATUS current
    DESCRIPTION
      "The logarithm to the base 2 of the mean SyncInterval for
multicast messages."
```

```
    REFERENCE "IEEE Std 1588-2008 7.7.2.3 and 8.2.5.4.3"
    DEFVAL { 0 }
    ::= { ieeeC37238PortDSIfEntry 9 }

ifIeeeC37238PortDSDelayMech OBJECT-TYPE
    SYNTAX INTEGER {
                        e2e         (1),
                        p2p         (2),
                        disabled    (254)
                    }
    MAX-ACCESS          read-write
    STATUS  current
    DESCRIPTION
      "The propagation delay measuring option used by the port. For
IEEE C37.238 compliant implementations this value shall be 2 (p2p)."
    REFERENCE "IEEE Std 1588-2008 8.2.5.4.4 and Table 9"
    DEFVAL  { 2 }
    ::= { ieeeC37238PortDSIfEntry 10 }

ifIeeeC37238PortDSLogMinPdlyRInt OBJECT-TYPE
    SYNTAX Integer32(-128..127)
    MAX-ACCESS read-write
    STATUS current
    DESCRIPTION
      "The logarithm to the base 2 of the minPdelayReqInterval."
    REFERENCE "IEEE Std 1588-2008 7.7.2.5 and 8.2.5.4.5"
    DEFVAL { 0 }
    ::= { ieeeC37238PortDSIfEntry 11 }

ifIeeeC37238PortDSVersionNumber OBJECT-TYPE
    SYNTAX Unsigned32(0..63)
    MAX-ACCESS read-only
    STATUS current
    DESCRIPTION
      "The PTP version in use on the port. For IEEE C37.238 compliant
implementations this value shall be 2."
    REFERENCE "IEEE Std 1588-2008 8.2.5.4.6"
    DEFVAL { 2 }
    ::= { ieeeC37238PortDSIfEntry 12 }

ifIeeeC37238PortDSPtpPortEnabled OBJECT-TYPE
    SYNTAX TruthValue
    MAX-ACCESS read-write
    STATUS current
    DESCRIPTION
      "True if port is enabled."
    DEFVAL { false }
    ::= { ieeeC37238PortDSIfEntry 13 }
ifIeeeC37238PortDSDlyAsymmetryM OBJECT-TYPE
    SYNTAX Integer32
    MAX-ACCESS read-write
    STATUS current
    DESCRIPTION
      "Path delay asymmetry. The most significant 4 bytes."
    ::= { ieeeC37238PortDSIfEntry 14 }
```

```
ifIeeeC37238PortDSDlyAsymmetryL OBJECT-TYPE
    SYNTAX Integer32
    MAX-ACCESS read-write
    STATUS current
    DESCRIPTION
      "Path delay asymmetry. The least significant 4 bytes."
    ::= { ieeeC37238PortDSIfEntry 15 }

ifIeeeC37238PortDSProfileId OBJECT-TYPE
    SYNTAX INTEGER {
                    ieee1588Default (0),
                    power           (1),
                    ieee8021as      (2),
                    lxi             (3),
                    telecom         (4)
                   }
    MAX-ACCESS  read-write
    STATUS  current
    DESCRIPTION
      "Indicates the PTP Profile in use."
    DEFVAL { 1 }
    ::= { ieeeC37238PortDSIfEntry 16 }

ifIeeeC37238PortDSNetProtocol OBJECT-TYPE
    SYNTAX INTEGER {
                     ieee8023   (1),
                     udpIpv4    (2)
                   }
    MAX-ACCESS  read-write
    STATUS  current
    DESCRIPTION
       "Indicates Network Protocol in use. For IEEE C37.238 compliant
implementations this value shall be 1 (ieee8023)."
    DEFVAL  { 1 }
    ::= { ieeeC37238PortDSIfEntry 17 }

ifIeeeC37238PortDSVlanId OBJECT-TYPE
    SYNTAX  Unsigned32(0..4095)
    MAX-ACCESS  read-write
    STATUS  current
    DESCRIPTION
      "Indicates VLAN ID in use."
    DEFVAL  { 0 }
    ::= { ieeeC37238PortDSIfEntry 18 }

ifIeeeC37238PortDSPriority OBJECT-TYPE
    SYNTAX  Unsigned32(0..7)
    MAX-ACCESS  read-write
    STATUS  current
    DESCRIPTION
      "Indicates VLAN tag Priority in use."
    DEFVAL  { 4 }
    ::= { ieeeC37238PortDSIfEntry 19 }
--=====================================================================
--  Transparent Clock Default data set represents default Transparent
--  Clock parameters.
--=====================================================================
```

```
ieeeC37238TCDefaultDS
    OBJECT IDENTIFIER ::= { ieeeC37238Objects 6 }

ieeeC37238TCDefaultDSClkIdentity OBJECT-TYPE
    SYNTAX  ClockIdentity
    MAX-ACCESS  read-only
    STATUS  current
    DESCRIPTION
      "The Clock Identity of the local clock."
    REFERENCE  "IEEE Std 1588-2008 7.6.2.1 and 8.3.2.2.1"
    ::= { ieeeC37238TCDefaultDS 1 }

ieeeC37238TCDefaultDSNumberPorts OBJECT-TYPE
    SYNTAX  Unsigned32(0..255)
    MAX-ACCESS  read-only
    STATUS  current
    DESCRIPTION
      "The number of PTP ports of the device."
    REFERENCE  "IEEE Std 1588-2008 8.3.2.2.2"
    ::= { ieeeC37238TCDefaultDS 2 }

ieeeC37238TCDefaultDSDelayMech OBJECT-TYPE
    SYNTAX INTEGER {
                         e2e         (1),
                         p2p         (2),
                         disabled    (254)
                     }
    MAX-ACCESS  read-write
    STATUS  current
    DESCRIPTION
      "The Delay Mechanism used by the device.For IEEE C37.238
compliant implementations this value shall be 2 (p2p)."
    REFERENCE "IEEE Std 1588-2008 8.3.2.3.1 and Table 9"
    DEFVAL  { 254 }
    ::= { ieeeC37238TCDefaultDS 3 }

ieeeC37238TCDefaultDSPriDomain OBJECT-TYPE
    SYNTAX  Integer32
    MAX-ACCESS  read-write
    STATUS  current
    DESCRIPTION
       "Domain number of the primary syntonization domain. The
initialization value shall be 0."
    REFERENCE "IEEE Std 1588-2008 10.1 and 8.3.2.3.2"
    ::= { ieeeC37238TCDefaultDS 4 }

ieeeC37238TCDefaultDSSyntonize OBJECT-TYPE
    SYNTAX  TruthValue
    MAX-ACCESS  read-write
    STATUS  current
    DESCRIPTION
      "True if syntonization enabled."
    ::= { ieeeC37238TCDefaultDS 5 }

ieeeC37238TCDefaultDSCurGMaster OBJECT-TYPE
    SYNTAX  ClockIdentity
    MAX-ACCESS  read-only
```

```
    STATUS  current
    DESCRIPTION
      "Comprises current grandmaster identity."
    ::= { ieeeC37238TCDefaultDS 6 }

ieeeC37238TCDefaultDSTwoStepFlag OBJECT-TYPE
    SYNTAX  TruthValue
    MAX-ACCESS  read-write
    STATUS  current
    DESCRIPTION
      "True if the clock is a two-step clock."
    REFERENCE  "IEEE Std 1588-2008 8.2.1.2.1"
    ::= { ieeeC37238TCDefaultDS 7 }

ieeeC37238TCDefaultDSGMIdentity OBJECT-TYPE
    SYNTAX  Integer32
    MAX-ACCESS  read-only
    STATUS  current
    DESCRIPTION
      "Grandmaster Identity received in GRANDMASTER_ID TLV."
    ::= { ieeeC37238TCDefaultDS 8 }

ieeeC37238TCDefaultDSNetProtocol OBJECT-TYPE
    SYNTAX INTEGER {
                       ieee8023   (1),
                       udpIpv4    (2)
                    }
    MAX-ACCESS          read-write
    STATUS  current
    DESCRIPTION
      "Indicates Network Protocol in use. For IEEE C37.238 compliant
implementations this value shall be 1 (ieee8023)."
    DEFVAL  { 1 }
    ::= { ieeeC37238TCDefaultDS 9 }

ieeeC37238TCDefaultDSVlanId OBJECT-TYPE
    SYNTAX  Unsigned32(0..4095)
    MAX-ACCESS          read-write
    STATUS  current
    DESCRIPTION
      "Indicates VLAN ID in use."
    DEFVAL  { 0 }
    ::= { ieeeC37238TCDefaultDS 10 }

ieeeC37238TCDefaultDSPriority OBJECT-TYPE
    SYNTAX  Unsigned32(0..7)
    MAX-ACCESS  read-write
    STATUS  current
    DESCRIPTION
      "Indicates VLAN tag Priority in use."
    DEFVAL  { 4 }
    ::= { ieeeC37238TCDefaultDS 11 }

--=====================================================================
--  Transparent Clock per port data set represents per port Transparent
--  Clock parameters.
--=====================================================================
```

```
ieeeC37238TCPortDSIfTable OBJECT-TYPE
    SYNTAX SEQUENCE OF IeeeC37238TCPortDSIfEntry
    MAX-ACCESS not-accessible
    STATUS current
    DESCRIPTION
       "A table of Transparent Clock port related variables."
    ::= { ieeeC37238Objects 7 }

ieeeC37238TCPortDSIfEntry OBJECT-TYPE
    SYNTAX IeeeC37238TCPortDSIfEntry
    MAX-ACCESS not-accessible
    STATUS current
    DESCRIPTION
       "A list of objects pertaining to a transparent clock port."
    INDEX { ifIeeeC37238TCPortDSIfIndex }
    ::= { ieeeC37238TCPortDSIfTable 1 }

IeeeC37238TCPortDSIfEntry ::=
    SEQUENCE {
            ifIeeeC37238TCPortDSIfIndex        Unsigned32,
            ifIeeeC37238TCPortDSPortNumber     Unsigned32,
            ifIeeeC37238TCPortDSLMinPdlyRInt   Integer32,
            ifIeeeC37238TCPortDSFaulty         TruthValue,
            ifIeeeC37238TCPortDSMPathPDlyM     Integer32,
            ifIeeeC37238TCPortDSMPathPDlyL     Integer32,
            ifIeeeC37238TCPortDSDlyAsymmM      Integer32,
            ifIeeeC37238TCPortDSDlyAsymmL      Integer32
      }

ifIeeeC37238TCPortDSIfIndex OBJECT-TYPE
    SYNTAX Unsigned32(0..65535)
    MAX-ACCESS not-accessible
    STATUS current
    DESCRIPTION
      "Index for TCPortDS Table"
    ::= { ieeeC37238TCPortDSIfEntry 1 }

ifIeeeC37238TCPortDSPortNumber OBJECT-TYPE
    SYNTAX Unsigned32(0..65535)
    MAX-ACCESS read-only
    STATUS current
    DESCRIPTION
      "Port number of the local port."
    REFERENCE "IEEE Std 1588-2008 7.5.2 and 8.3.3.2.1"
    ::= { ieeeC37238TCPortDSIfEntry 2 }
ifIeeeC37238TCPortDSLMinPdlyRInt OBJECT-TYPE
    SYNTAX Integer32(-128..127)
    MAX-ACCESS read-write
    STATUS current
    DESCRIPTION
      "The logarithm to the base 2 of the minPdelayReqInterval."
    REFERENCE "IEEE Std 1588-2008 7.7.2.5 and 8.3.3.3.1"
    DEFVAL { 0 }
    ::= { ieeeC37238TCPortDSIfEntry 3 }

ifIeeeC37238TCPortDSFaulty OBJECT-TYPE
    SYNTAX  TruthValue
```

```
    MAX-ACCESS  read-only
    STATUS  current
    DESCRIPTION
      "True if the port is faulty and False if the port
is operating normally. The initialization value shall be False."
    REFERENCE "IEEE Std 1588-2008 8.3.3.3.2"
    ::= { ieeeC37238TCPortDSIfEntry 4 }

ifIeeeC37238TCPortDSMPathPDlyM OBJECT-TYPE
    SYNTAX Integer32
    MAX-ACCESS read-only
    STATUS current
    DESCRIPTION
      "The estimate of the current one-way propagation delay. The most
significant 4 bytes."
    REFERENCE "IEEE Std 1588-2008 8.3.3.3.3"
    ::= { ieeeC37238TCPortDSIfEntry 5 }

ifIeeeC37238TCPortDSMPathPDlyL OBJECT-TYPE
    SYNTAX Integer32
    MAX-ACCESS read-only
    STATUS current
    DESCRIPTION
      "The estimate of the current one-way propagation delay. The least
significant 4 bytes."
    REFERENCE "IEEE Std 1588-2008 8.3.3.3.3"
    ::= { ieeeC37238TCPortDSIfEntry 6 }

ifIeeeC37238TCPortDSDlyAsymmM OBJECT-TYPE
    SYNTAX Integer32
    MAX-ACCESS read-write
    STATUS current
    DESCRIPTION
      "Path delay asymmetry. The most significant 4 bytes."
    ::= { ieeeC37238TCPortDSIfEntry 7 }

ifIeeeC37238TCPortDSDlyAsymmL OBJECT-TYPE
    SYNTAX Integer32
    MAX-ACCESS read-write
    STATUS current
    DESCRIPTION
      "Path delay asymmetry. The least significant 4 bytes."
    ::= { ieeeC37238TCPortDSIfEntry 8 }


-- ================================================================
--        IEEE C37.238  M I B   N O T I F I C A T I O N S
-- ================================================================

ieeeC37238Events OBJECT IDENTIFIER ::= { ieeeC37238Notifications 0 }

ieeeC37238EventChangeOfMaster NOTIFICATION-TYPE
    STATUS  current
    DESCRIPTION
        "Indicates that new grandmaster has been selected."
    ::= { ieeeC37238Events 1 }

```

```
ieeeC37238EventMasterStepChange NOTIFICATION-TYPE
    STATUS  current
    DESCRIPTION
        "Indicates that a step change occurred in current grandmaster
time."
    ::= { ieeeC37238Events 2 }

ieeeC37238EventFaultyState NOTIFICATION-TYPE
    STATUS  current
    DESCRIPTION
        "Indicates that a clock has entered faulty state."
    ::= { ieeeC37238Events 3 }

ieeeC37238EventPortStateChange NOTIFICATION-TYPE
    STATUS  current
    DESCRIPTION
        "Indicates that port state has changed."
    ::= { ieeeC37238Events 4 }

ieeeC37238EventOfstExceedsLimit NOTIFICATION-TYPE
    STATUS  current
    DESCRIPTION
        "Indicates that for a clock in a slave state Offset from Master
exceeds configurable limit."
    ::= { ieeeC37238Events 5 }

ieeeC37238EventOtherProfileDetect NOTIFICATION-TYPE
    STATUS  current
    DESCRIPTION
        "Indicates that other PTP profile has been detected."
    ::= { ieeeC37238Events 6 }

ieeeC37238EventLeapSecAnnounced NOTIFICATION-TYPE
    STATUS  current
    DESCRIPTION
        "Indicates that a leap second has been announced."
    ::= { ieeeC37238Events 7 }

ieeeC37238EventPTPServiceStarted NOTIFICATION-TYPE
    STATUS  current
    DESCRIPTION
        "Indicates that PTP service has started."
    ::= { ieeeC37238Events 8 }

ieeeC37238EventPTPServiceStopped NOTIFICATION-TYPE
    STATUS  current
    DESCRIPTION
        "Indicates that PTP service has stopped."
    ::= { ieeeC37238Events 9 }

--=====================================================================
-- IEEE C37.238  MIB Module - Conformance Information
--=====================================================================
ieeeC37238Compliances OBJECT IDENTIFIER ::= { ieeeC37238Conformance 1 }
ieeeC37238Groups      OBJECT IDENTIFIER ::= { ieeeC37238Conformance 2 }

ieeeC37238SystemDefaultReqdGroup OBJECT-GROUP
```

```
    OBJECTS {
            ieeeC37238DefaultDSTwoStepFlag,
            ieeeC37238DefaultDSClkIdentity,
            ieeeC37238DefaultDSNumberPorts,
            ieeeC37238DefaultDSClkClass,
            ieeeC37238DefaultDSClkAccuracy,
            ieeeC37238DefaultDSOfsScdLogVar,
            ieeeC37238DefaultDSPriority1,
            ieeeC37238DefaultDSPriority2,
            ieeeC37238DefaultDSDomainNumber,
            ieeeC37238DefaultDSSlaveOnly,
            ieeeC37238DefaultDSGMIdentity,
            ieeeC37238DefaultDSOfstFrMLimitM,
            ieeeC37238DefaultDSOfstFrMLimitL
      }
    STATUS current
    DESCRIPTION
      "Objects in the System Default required global group."
    ::= { ieeeC37238Groups 1 }

ieeeC37238SystemCurrentGroup OBJECT-GROUP
    OBJECTS {
      ieeeC37238CurrentDSStepsRemoved,
      ieeeC37238CurrentDSOfstFrMasterM,
      ieeeC37238CurrentDSOfstFrMasterL
     }
    STATUS current
    DESCRIPTION
      "Objects in the System Current global group."
    ::= { ieeeC37238Groups 2 }

ieeeC37238SystemClockParentGroup OBJECT-GROUP
    OBJECTS {
       ieeeC37238ParentDSClkIdentity,
       ieeeC37238ParentDSPortNumber,
       ieeeC37238ParentDSStats,
       ieeeC37238ParentDSObsOfstScdLVar,
       ieeeC37238ParentDSObsPhChgRate,
       ieeeC37238ParentDSGMClkIdentity,
       ieeeC37238ParentDSGMClkClass,
       ieeeC37238ParentDSGMClkAccuracy,
       ieeeC37238ParentDSGMOfstScdLVar,
       ieeeC37238ParentDSGMPriority1,
       ieeeC37238ParentDSGMPriority2,
       ieeeC37238ParentDSGMIdentity
      }
    STATUS current
    DESCRIPTION
         "Objects in the Clock Parent global group."
    ::= { ieeeC37238Groups 3 }

ieeeC37238SystemTimePropGroup OBJECT-GROUP
    OBJECTS {
            ieeeC37238TimePropDSCurUTCOfst,
            ieeeC37238TimePropDSCurUTCOfstVd,
            ieeeC37238TimePropDSLeap59,
            ieeeC37238TimePropDSLeap61,
```

```
            ieeeC37238TimePropDSTmeTraceable,
            ieeeC37238TimePropDSFrqTraceable,
            ieeeC37238TimePropDSPTPTimescale,
            ieeeC37238TimePropDSTimeSource,
            ieeeC37238TimePropDSLocalTCurOfs,
            ieeeC37238TimePropDSLocalTJumpS,
            ieeeC37238TimePropDSLocalTNtJump,
            ieeeC37238TimePropDSLocalTName,
            ieeeC37238TimePropDSLeapEvLatest,
            ieeeC37238TimePropDSUTCOfstNext,
            ieeeC37238TimePropDSLeapEvExpiry
           }
    STATUS current
    DESCRIPTION
      "Objects for the Time Properties Global group."
    ::= { ieeeC37238Groups 4 }

ieeeC37238PortDataSetGlobalGroup OBJECT-GROUP
    OBJECTS {
        ifIeeeC37238PortDSClkIdentity,
        ifIeeeC37238PortDSPortNumber,
        ifIeeeC37238PortDSPortState,
        ifIeeeC37238PortDSMPathPDlyM,
        ifIeeeC37238PortDSMPathPDlyL,
        ifIeeeC37238PortDSLogAnnounceInt,
        ifIeeeC37238PortDSAnnounceRcTout,
        ifIeeeC37238PortDSLogSyncInt,
        ifIeeeC37238PortDSDelayMech,
        ifIeeeC37238PortDSLogMinPdlyRInt,
        ifIeeeC37238PortDSVersionNumber,
        ifIeeeC37238PortDSPtpPortEnabled,
        ifIeeeC37238PortDSDlyAsymmetryM,
        ifIeeeC37238PortDSDlyAsymmetryL,
        ifIeeeC37238PortDSProfileId,
        ifIeeeC37238PortDSNetProtocol,
        ifIeeeC37238PortDSVlanId,
        ifIeeeC37238PortDSPriority
      }
    STATUS current
    DESCRIPTION
      "Objects for the port dataset media independent global group."
    ::= {ieeeC37238Groups 5 }

ieeeC37238TCPropertiesGroup OBJECT-GROUP
    OBJECTS {
            ieeeC37238TCDefaultDSClkIdentity,
            ieeeC37238TCDefaultDSNumberPorts,
            ieeeC37238TCDefaultDSDelayMech,
            ieeeC37238TCDefaultDSPriDomain,
            ieeeC37238TCDefaultDSSyntonize,
            ieeeC37238TCDefaultDSCurGMaster,
            ieeeC37238TCDefaultDSTwoStepFlag,
            ieeeC37238TCDefaultDSGMIdentity,
            ieeeC37238TCDefaultDSNetProtocol,
            ieeeC37238TCDefaultDSVlanId,
            ieeeC37238TCDefaultDSPriority
        }
```

```
    STATUS current
    DESCRIPTION
      "Objects for the Transparent Clock group."
    ::= { ieeeC37238Groups 6 }

ieeeC37238TCPortDataSetGroup OBJECT-GROUP
    OBJECTS {
            ifIeeeC37238TCPortDSPortNumber,
            ifIeeeC37238TCPortDSLMinPdlyRInt,
            ifIeeeC37238TCPortDSFaulty,
            ifIeeeC37238TCPortDSMPathPDlyM,
            ifIeeeC37238TCPortDSMPathPDlyL,
            ifIeeeC37238TCPortDSDlyAsymmM,
            ifIeeeC37238TCPortDSDlyAsymmL
      }
    STATUS current
    DESCRIPTION
      "Per port Objects for the Transparent Clock group."
    ::= { ieeeC37238Groups 7 }

ieeeC37238EventsPropertiesGroup NOTIFICATION-GROUP
    NOTIFICATIONS {
      ieeeC37238EventChangeOfMaster,
      ieeeC37238EventMasterStepChange,
      ieeeC37238EventFaultyState,
      ieeeC37238EventPortStateChange,
      ieeeC37238EventOfstExceedsLimit,
      ieeeC37238EventOtherProfileDetect,
      ieeeC37238EventLeapSecAnnounced,
      ieeeC37238EventPTPServiceStarted,
      ieeeC37238EventPTPServiceStopped
   }
    STATUS current
    DESCRIPTION
      "Objects for the Notification Properties group."
    ::= { ieeeC37238Groups 8 }

--=====================================================================
-- MIB Module Compliance statements
--=====================================================================

ieeeC37238Compliance MODULE-COMPLIANCE
    STATUS current
    DESCRIPTION
         "The compliance statement for support by a bridge of
          the IEEEC37-238-MIB module."

MODULE SNMPv2-MIB                   -- The SNMPv2-MIB [RFC3418]
    MANDATORY-GROUPS {
        systemGroup
    }

MODULE IF-MIB                       -- The interfaces MIB [RFC2863]
    MANDATORY-GROUPS {
        ifGeneralInformationGroup
    }

```

```
MODULE
    MANDATORY-GROUPS {
        ieeeC37238SystemDefaultReqdGroup,
        ieeeC37238SystemCurrentGroup,
        ieeeC37238SystemClockParentGroup,
        ieeeC37238SystemTimePropGroup,
        ieeeC37238PortDataSetGlobalGroup,
        ieeeC37238TCPropertiesGroup,
        ieeeC37238TCPortDataSetGroup,
        ieeeC37238EventsPropertiesGroup
    }
  ::= { ieeeC37238Compliances 1 }

END
```

Annex G

(informative)

Bibliography

[B1] IEC 60834-1 Ed. 2.0 Teleprotection Equipment of Power Systems - Performance and Testing – Part 1: Command Systems.

[B2] IEC 61850-7-2 Ed. 1.0 Communication networks and systems in substations - Part 7-2: Basic communication structure for substation and feeder equipment – Abstract communication service interface (ACSI).

[B3] IEC 61850-9-2 Ed. 1.0 Communication networks and systems in substations - Part 9-2: Specific communication service mapping (SCSM) – Sampled values over ISO/IEC 8802-3.

[B4] IEC 62439-3 Industrial communication networks high availability automation networks - Part 3: Parallel Redundancy Protocol (PRP) and High availability Seamless Ring (HSR).

[B5] IEEE Std 802.1Q-2005 IEEE Standard for Local and Metropolitan Area Networks - Virtual Bridged Local Area Networks.

[B6] IEEE Std C37.118-2005 IEEE Standard for Synchrophasors for Power Systems.

[B7] International Vocabulary of Basic and General Terms in Metrology.

[B8] ISO/IEC 10646:2003 Information technology - Universal Multiple-Octet Coded Character Set (UCS).